PFAFF®

synchrotronic 1229

Instruction book

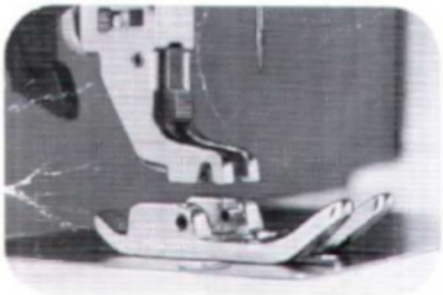

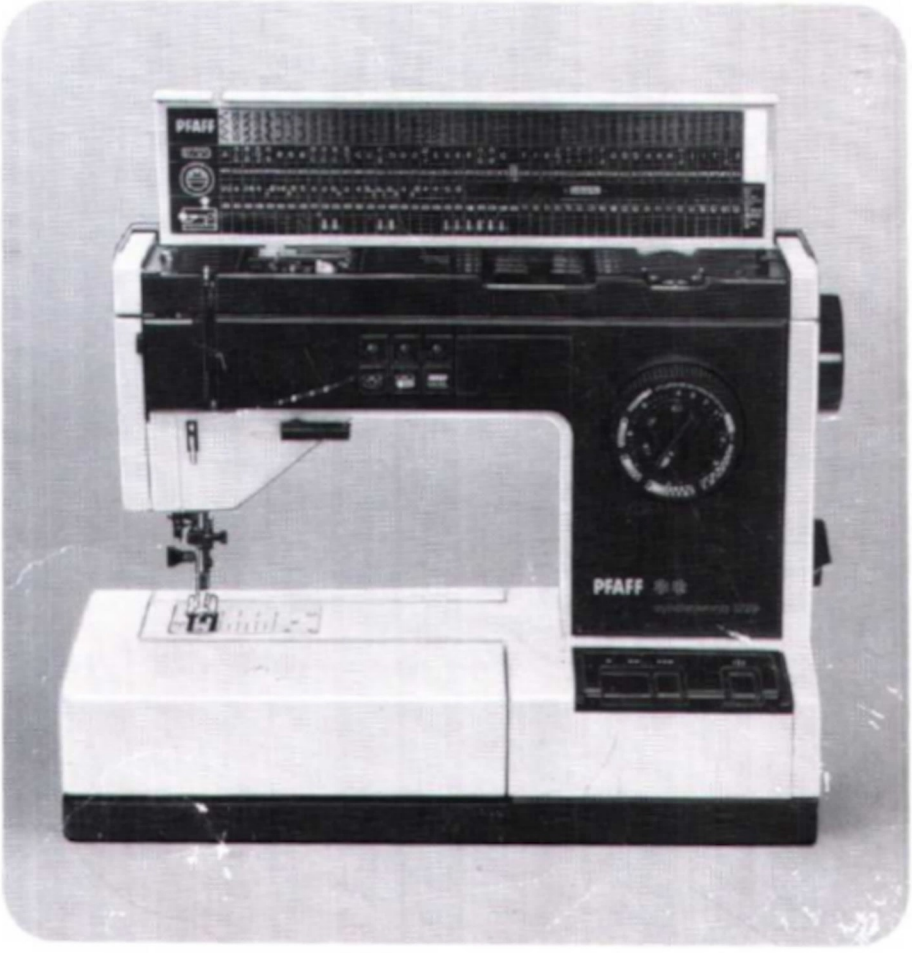

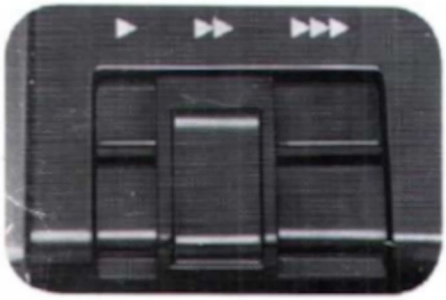

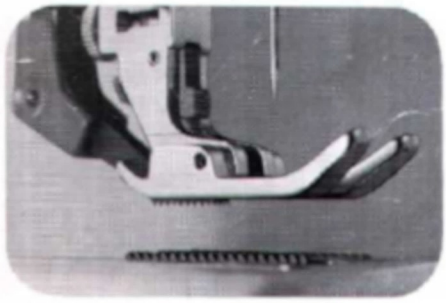

Parts of your sewing machine

1 Detachable work support with accessory compartment
2 Sewing foot
3 Sewing foot holder
4 Needle threader
5 Needle threader control
6 Needle thread tension
7 Take-up lever
8 Hinged top cover
9 Carrying handle
10 Hand wheel
11 Thread guide
12 Second (detachable) spool holder
13 Spool holder with swivel arm
14 Master switch
15 Top speed selector slide
16 Needle holder with screw
17 Control for reverse sewing and dropping the feed dog
18 Needle plate
19 Lid containing spare bobbins
20 Pattern start selector wheel
21 Bobbin winder
22 Pattern length selector wheel
23 Utility- and ornamental-stitch buttons
24 Master selector dial
25 Needle position and buttonhole knob
26 Buttonhole control
27 Base plate
28 Free arm cover, enclosing sewing hook
29 Free arm
30 Thread guide
31 Thread guide
32 Thread guide for bobbin winding
33 Accessories
34 Bobbin thread retainer stud
35 Stitch chart
36 Top feeding foot with thread cutter
37 Presser bar lifter (on back of machine arm)
38 Bobbin thread monitor
39 Bobbin winder indicator light
40 Top feed indicator light
41 Eraser button

Some safety rules

1. Be careful when sewing that your fingers will not be injured by the needle.
2. Make sure you pull out the power cord plug whenever you want to change needle, sewing foot, bobbin or needle plate, when you clean and oil the machine, or when you have to interrupt sewing and leave the machine for a while.
3. Be sure to use only a 15-watt light bulb in the sewing lamp.

IMPORTANT
Valid for United Kingdom only
The wires in this mains lead are coloured in accordance with the following code:
Blue: Neutral
Brown: Live
As the colours of the wires in the mains lead of this appliance may not correspond with the coloured marking identifying the terminals in your plug, procced as follows: The wire which is coloured blue must be connected to the terminal which is marked with the letter N or coloured black.
The wire which is coloured brown must be connected to the terminal which is marked with the letter L or coloured red.

Please note:
When a 13-ampere plug is used a 3-ampere fuse has to be fitted.

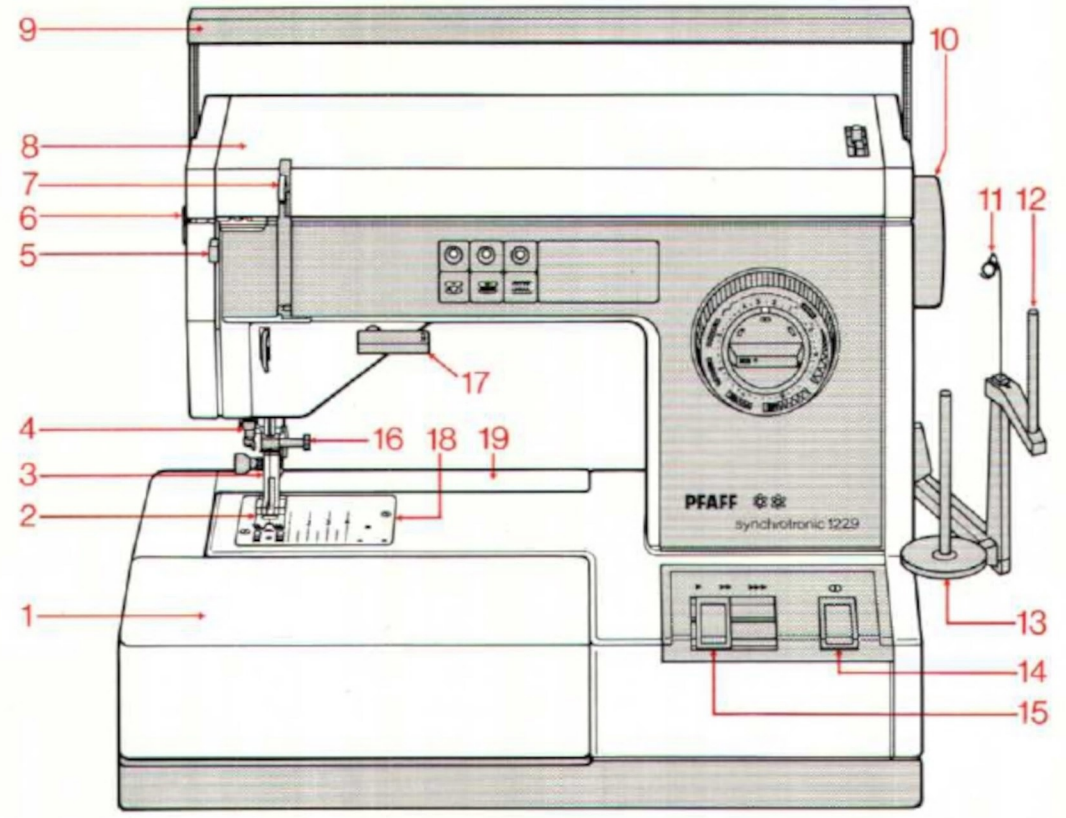
9
10
8
7
6
5
11
12
17
4
16
18
19
3
2
PFAFF
synchrotronic 1229
1
13
14
15

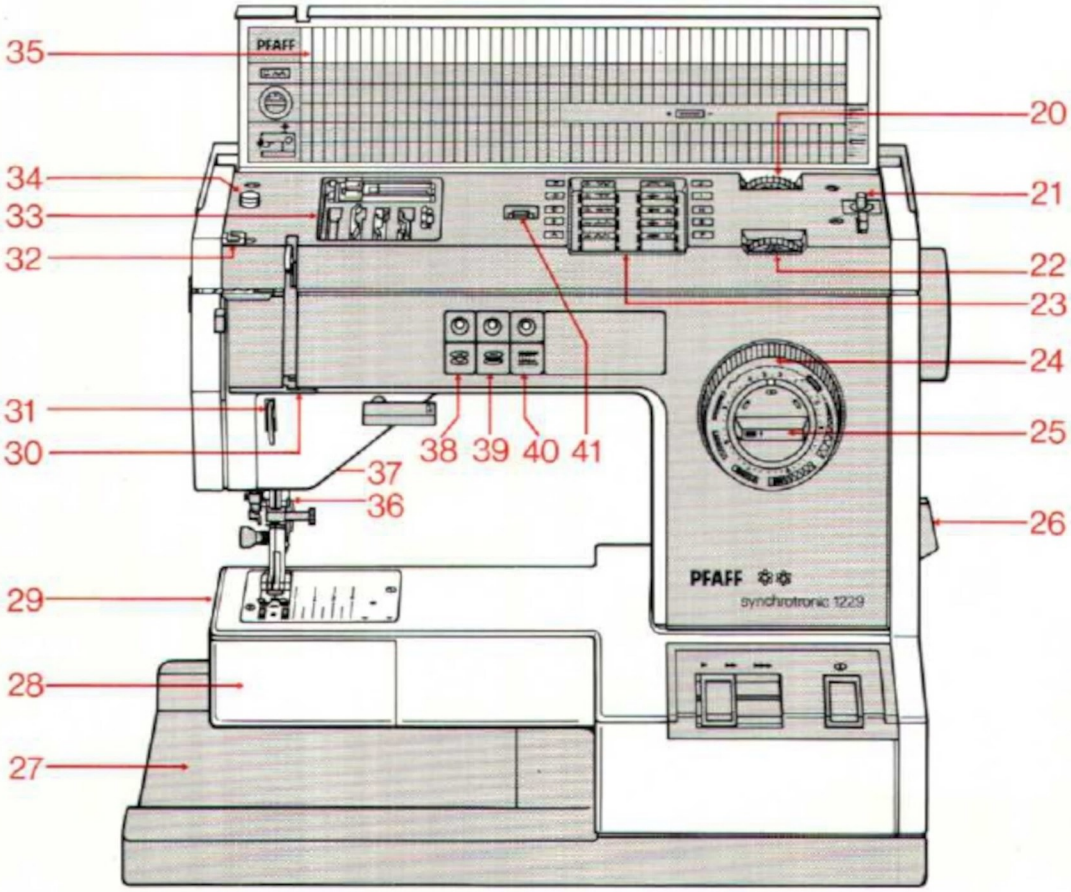
35
PFAFF
20
34
21
33
32
22
23
24
31
25
30
38
39
40
41
37
36
26
PFAFF
synchrotronic 1229
29
28
27

Contents **Page**

Accessory compartment 2
Buttonhole setting 22
Bobbin winder indicator light and disengaging the sewing mechanism 4
Changing the fuse 25
Changing the light bulb 24
Changing the needle 15
Changing the sewing foot 14
Cleaning and oiling 24
Drawing up the bobbin thread 9
Dual feed 11
Electrical connection and foot control 3
Electronic bobbin thread monitor 4
Electronic top speed selector 4
Inserting the bobbin 7
Inserting the bobbin case 7
Master switch 4
Master selector dial 12
Needle position 13
Opening the hinged top cover 2
Ornamental stitches 17
Overlock setting 20
Presser bar lifter and Stopmatic control 5
Removing bobbin case and bobbin 5
Removing and opening the carrying case cover 1
Removing and opening the detachable work support 1
Reverse sewing and dropping the feed dog 13
Sewing buttonholes 23
Sewing feet 18
Special accessories 28
Special sewing feet 19
Spool holder 2
Straight stitch 12
Thread cutter 11
Thread tensions 10
Threading the needle 9
Top feed indicator light 4
Trouble shooting 26
Upper threading 8
Utility-stitch combinations 16
Utility stitches 15
Utilitiy-stitch setting 16
Winding the bobbin 6
Zigzag stitch 12

Removing and opening the carrying case cover

To lift off the carrying case cover, swing up the carrying handle (K). Then press the catch (L) and let the lid swing forwards as far as it will go (M). Lift off the carrying case cover (N). Again press the catch and fold down the lid (O). The compartment behind it accommodates sewing thread, foot control and power cord.

Important: Before you replace the carrying case cover, make sure you swing the spool holder forwards (page 2).

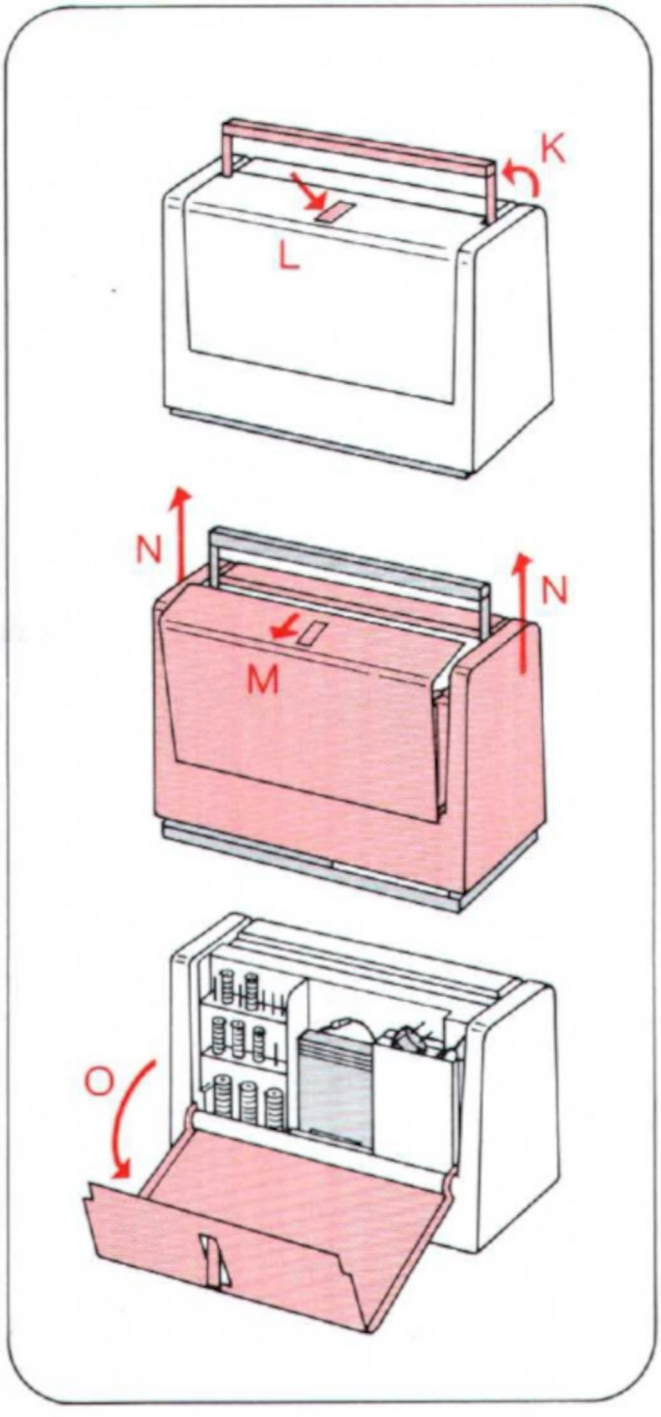

Removing and opening the detachable work support

Reach under the detachable work support (K) and swing it out toward the left (L). Swing the lid containing the spare bobbins to the rear (M). Lift the work support off (N) and open its lid (O) to accommodate accessories. To place spare bobbins in the lid, tilt it back (P).

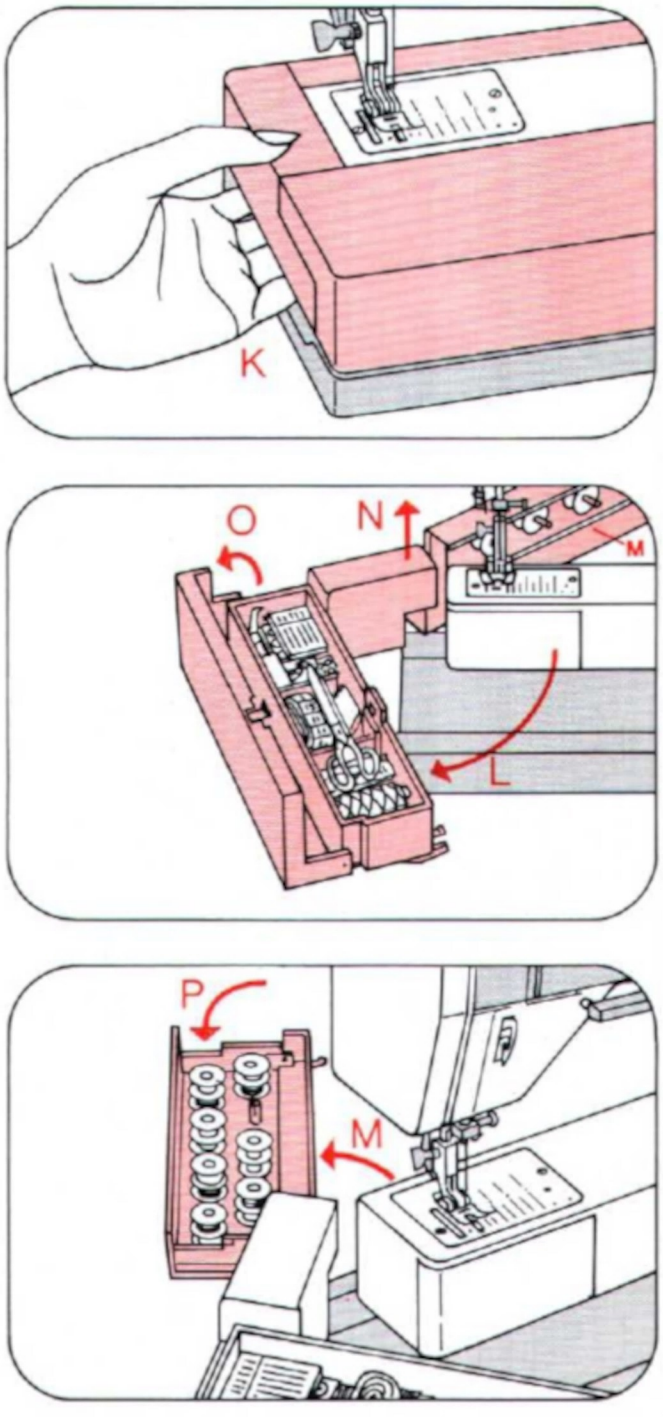

Opening the hinged top cover
Fold carrying handle 9 to the rear, then open hinged top cover 8 by swinging it back. There is a stitch chart with stitch settings inside the cover.

Spool holder
Spool holder 13 can be swung to two positions:
K = For bobbin winding and replacing the carrying case cover.
L = For sewing.
A second spool holder is included in the accessories. It is pushed over the wire (N) and onto the holder (O). The accessories further contain: 2 unreeling discs, P for small spools, and P + Q for large spools. These are pushed on the spool pin in front of the spool of thread.

Accessory compartment (33)
The illustration below shows how to arrange the snap-on feet in the compartment:
1 = clear-view sewing foot
2 = overlock foot
3 = blindstitch foot
4 = zipper foot
5 = buttonhole foot
The normal sewing foot is placed in the unnumbered recess. It is fitted to the sewing foot holder.

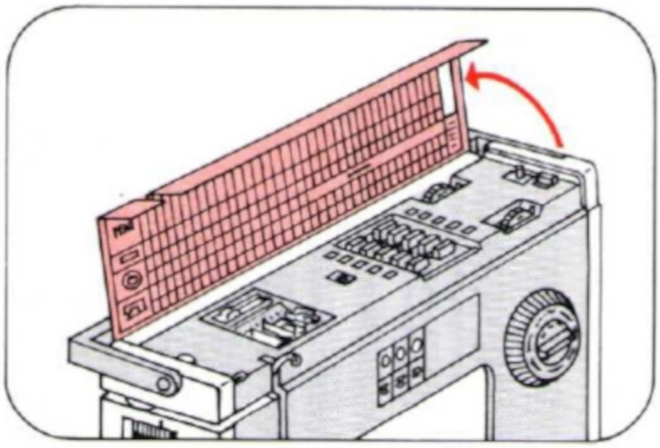

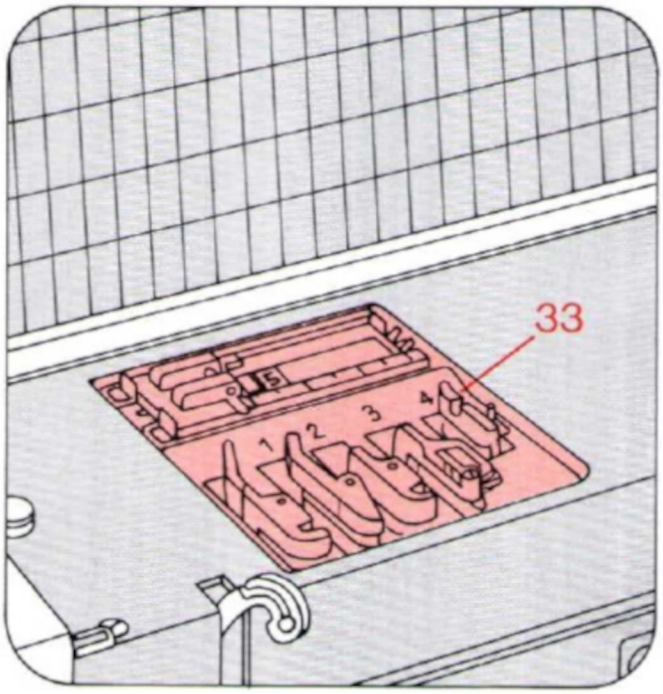

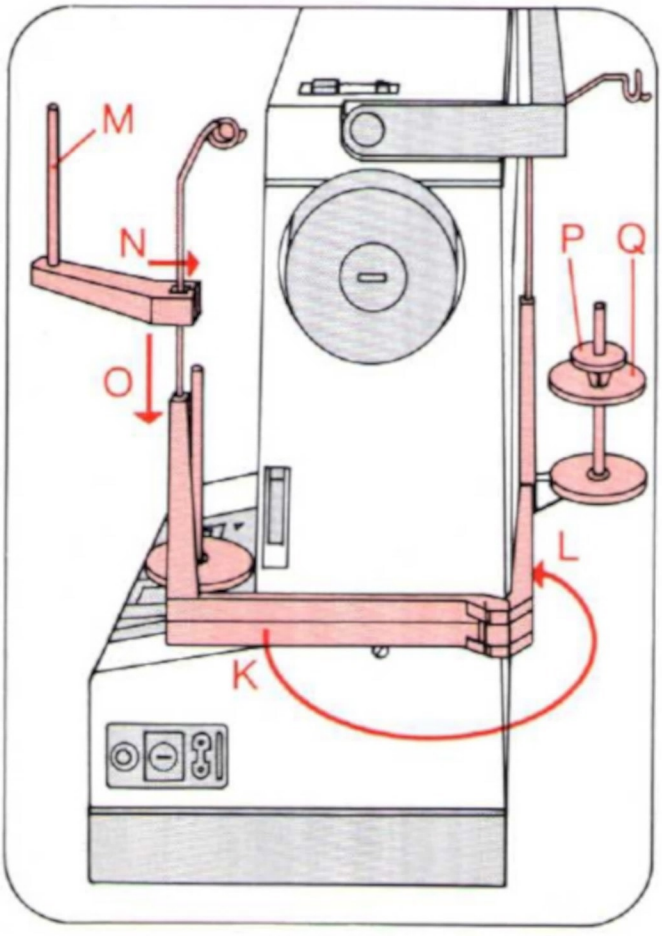

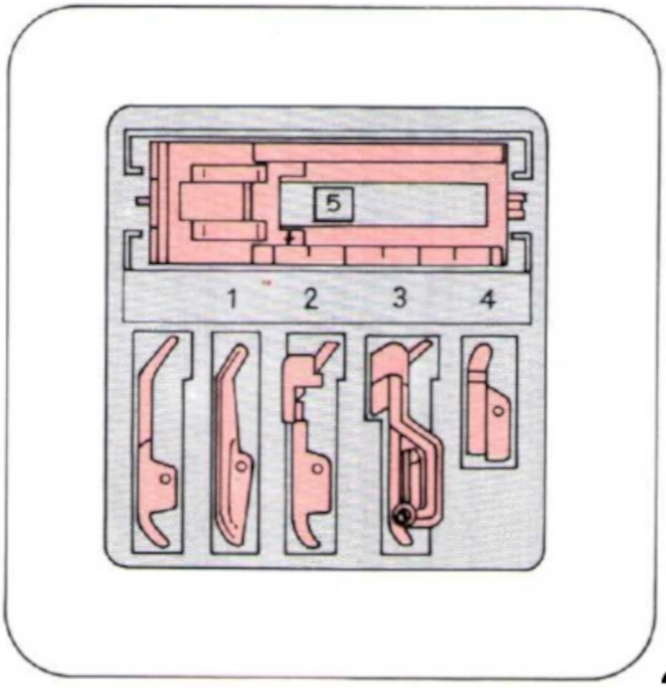

Electrical connection and foot control
Pull the cord out of the foot control and push plug M into the machine socket. Place the foot control under the table, as shown.
Push power cord plug K into the machine socket and plug L into the wall socket. Press master switch 14 (page 4). Press down foot control N. The machine starts sewing. The more you press down the pedal, the faster the machine runs. If the machine does not start, release the foot control, then press it down again.

To replace the cord in the foot control, pull it slightly, then release it, and it will rewind into the control automatically.

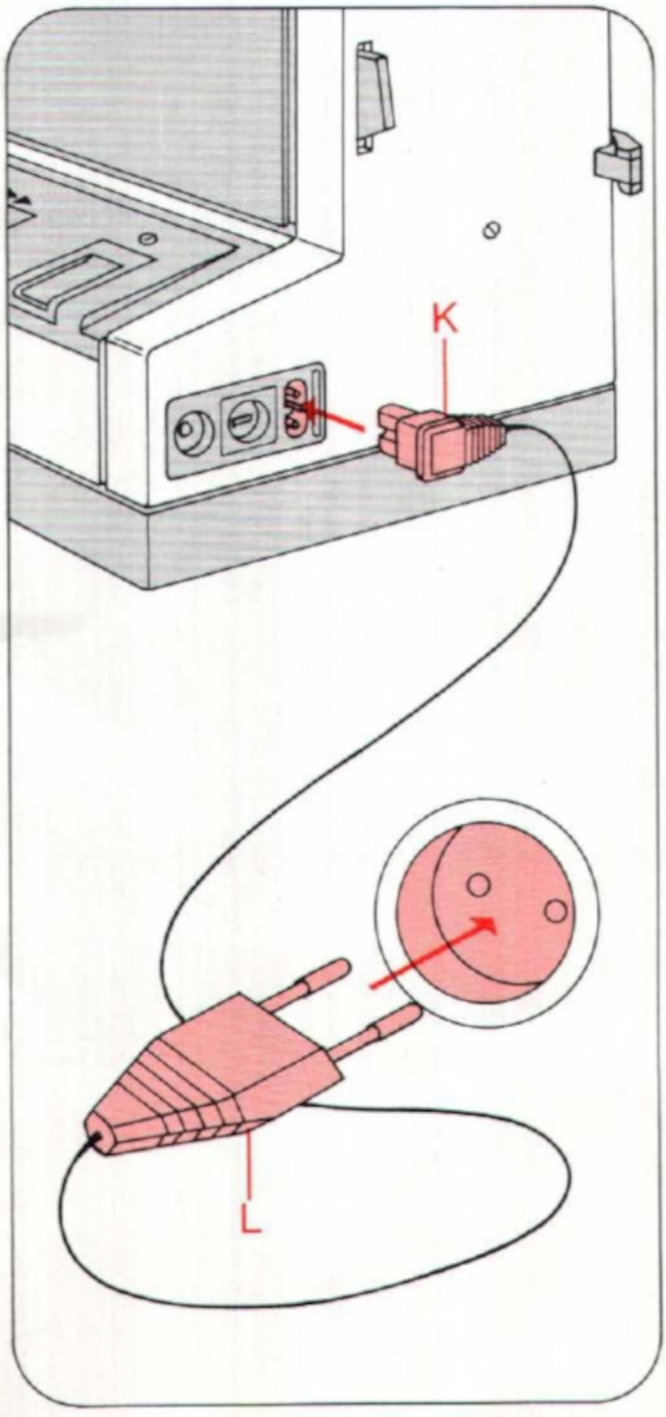

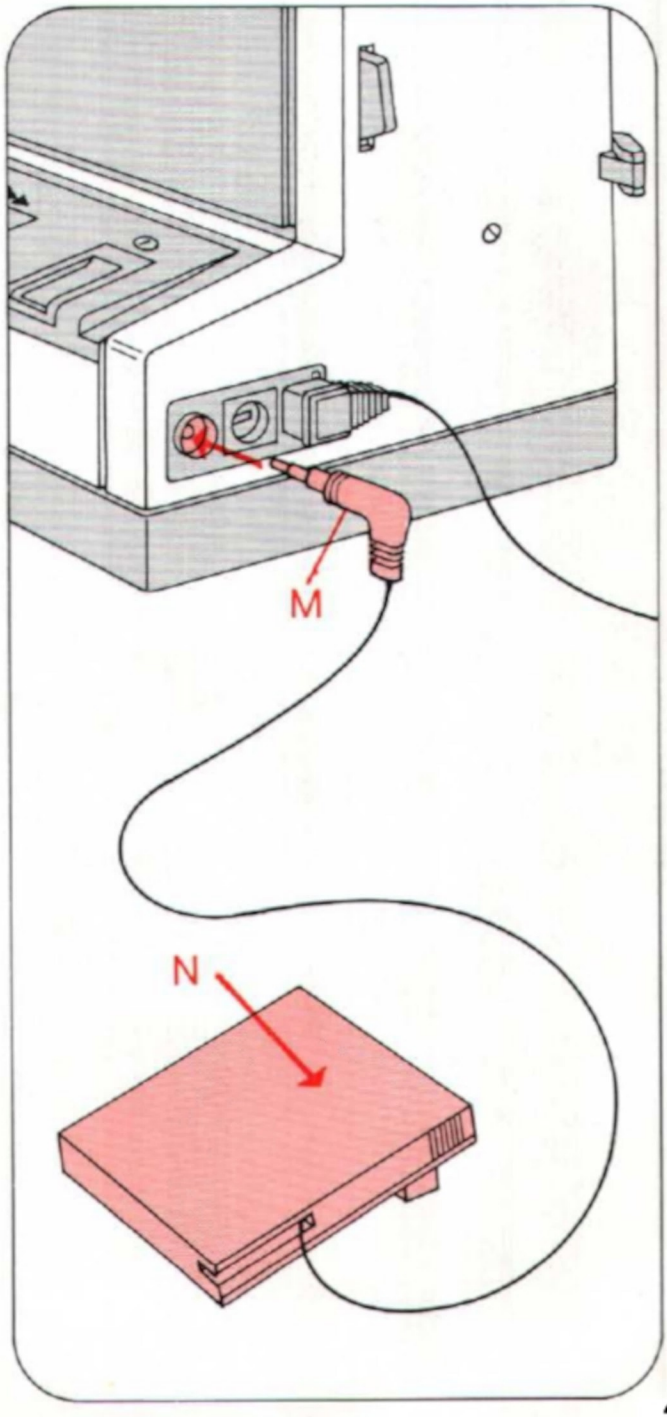

Master switch
Press master switch 14. Your machine is now ready for sewing.

Electronic top speed selector
When slide 15 is pushed toward ▶▶▶, the machine sews faster, when it is pushed toward ▶, it sews slower.
The piercing power of the needle remains the same, regardless of the machine speed.

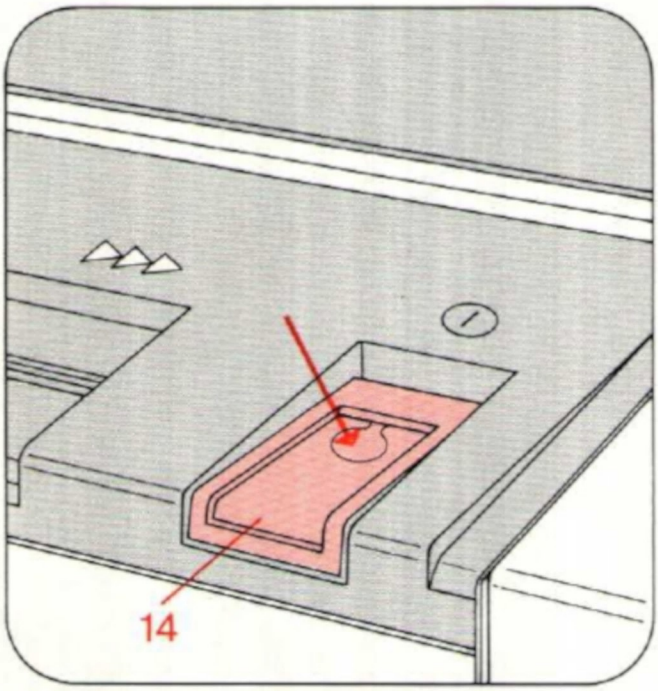

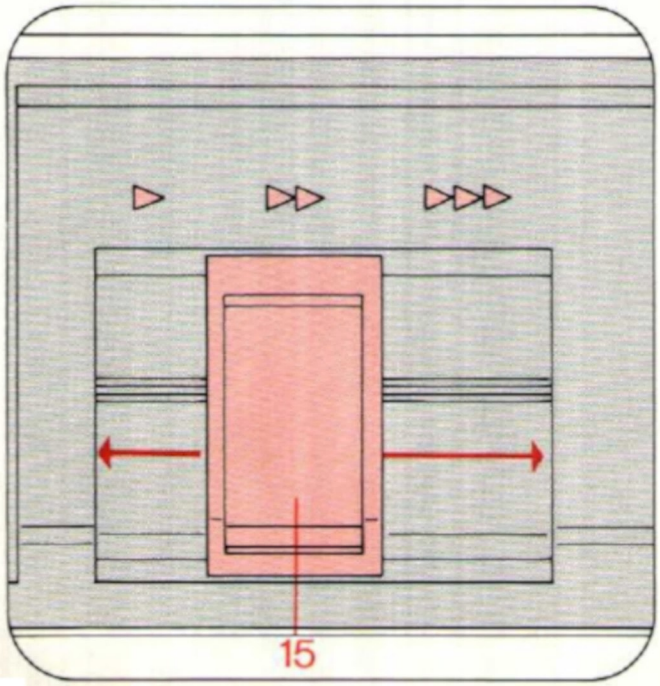

Bobbin thread monitor
The red bobbin thread monitor 38 starts to flash when the bobbin thread is running out. The indicator light goes out when a full bobbin is inserted and sewing is resumed.
Important: Free arm cover 28 must be kept closed.

Bobbin winder indicator light and disengaging the sewing mechanism
The yellow indicator light 39 lights up when the presser bar lifter is set at the Stopmatic position (K on page 5). In this position, the sewing mechanism is disengaged and the hand wheel cannot be turned.

Top feed indicator light
The green indicator light 40 lights up when the top feed is engaged so that the machine sews with dual feed (page 11).

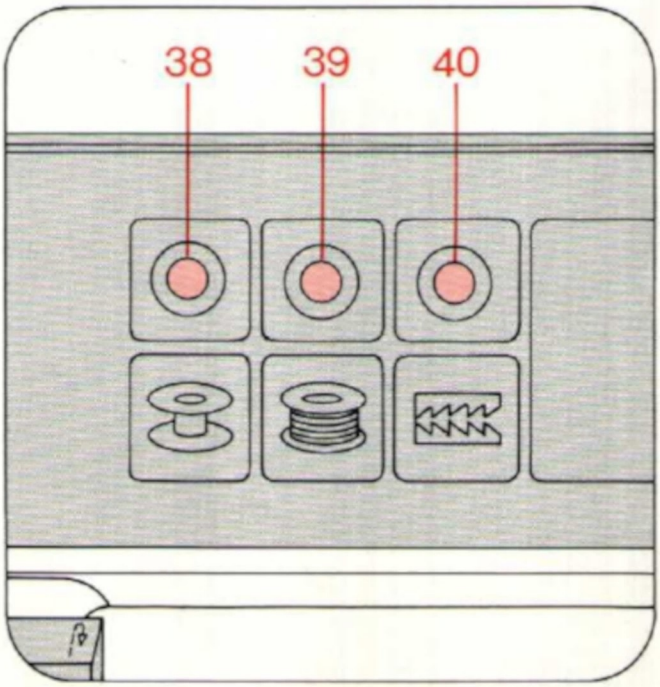

Presser bar lifter and Stopmatic control
Lever 37 has four positions:

K = Sewing foot is raised. The Stopmatic control raises the needle (for needle threading, bobbin winding and removing the work).

L = The sewing foot is raised (for turning the work).

M = The sewing foot is lowered for sewing.

N = The Stopmatic control raises the needle (for basting).

Removing bobbin case and bobbin
Raise the needle, and open free arm cover 28. Lift latch K and take out the bobbin. The bobbin cannot fall out as long as you keep latch K raised.

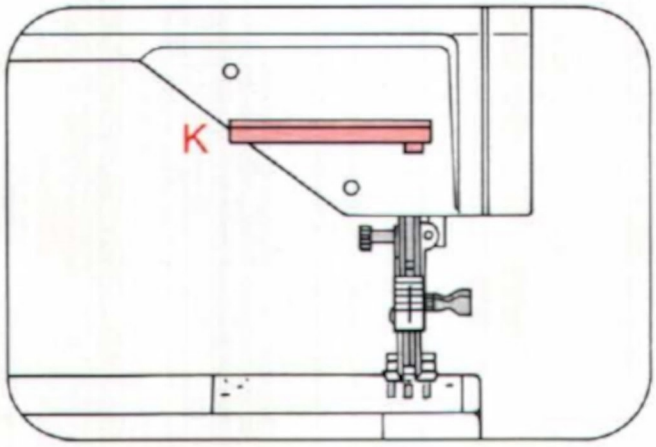

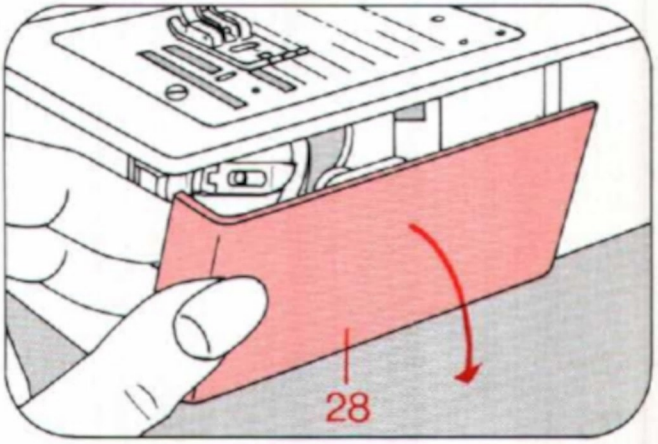

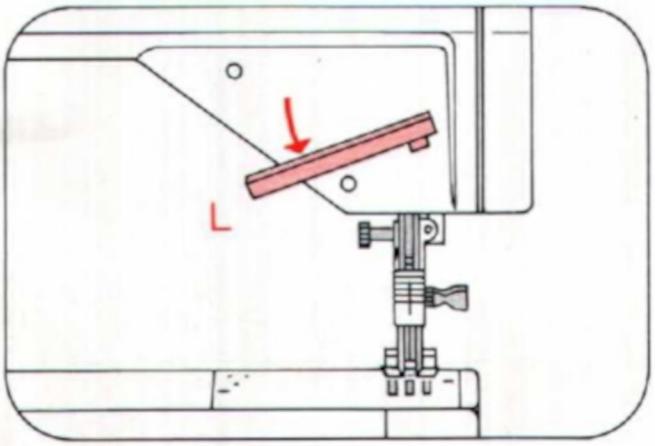

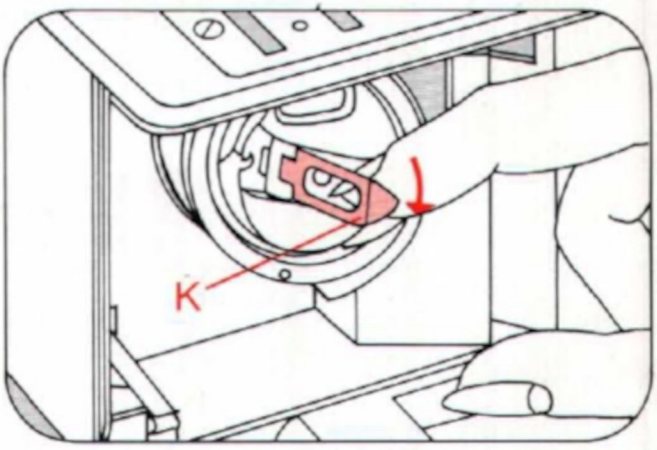

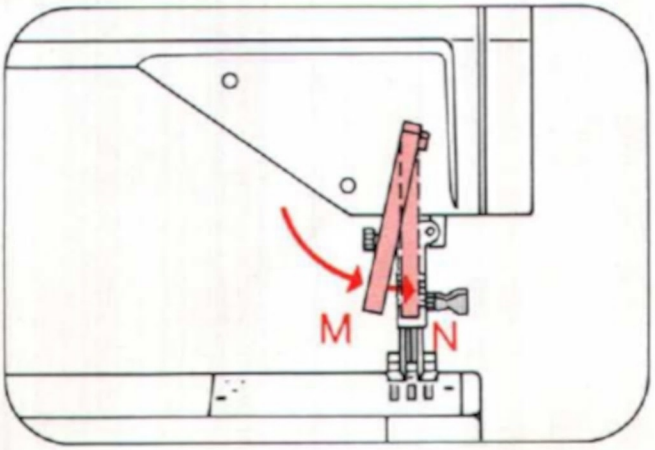

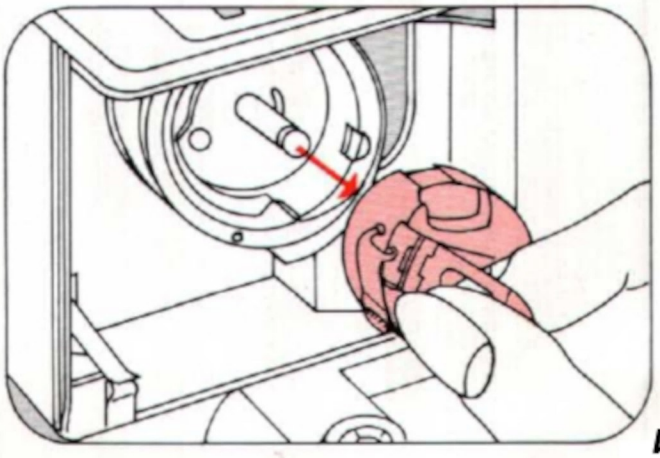

Winding from a second spool
Raise presser bar lifter 37 to its horizontal (K) position. The yellow indicator light 39 lights up. Swing spool holder 39 forwards and place a spool of thread on it. Push a suitable unreeling disc M on the spool pin. Place a bobbin on spindle 21 so that pin K enters slot L. Pull the thread from the spool, pass it through guides 11 and 32, counter-clockwise around retainer stud 34, and then to the bobbin winder. Wind a few turns of thread on the bobbin clockwise. Push lever 8 against the bobbin to start the bobbin winder and hold the thread end at the beginning. The bobbin winder stops automatically when the bobbin is full. If you want to stop the bobbin winder earlier, pull lever 8 forwards. Remove the bobbin and cut the thread.

Winding through the needle eye
(only when a metal sewing foot is fitted)
Raise presser bar lifter 37 to its horizontal (K) position. The yellow indicator light 39 lights up. Draw the needle thread under the sewing foot, to the left and up into guide 32. Then proceed as described for winding a bobbin from the spool.

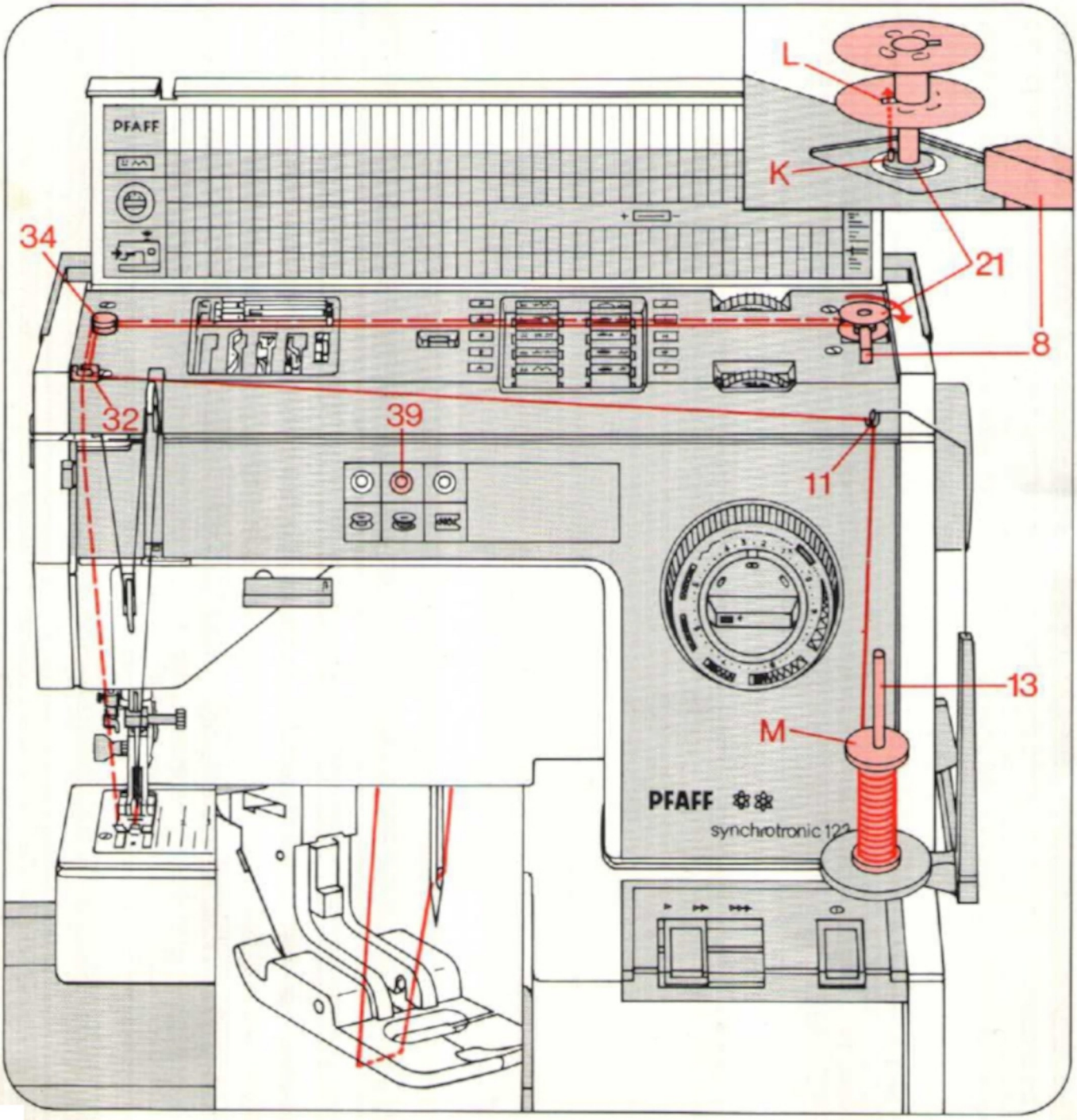

Inserting the bobbin
Insert the filled bobbin into the bobbin case so that the thread unreels toward the back (K). Then draw the thread into slot L and under the spring into eye M.

Inserting the bobbin case
Lift latch K and push the bobbin case onto stud M as far as it will go, making sure cutout L points upwards. Release latch K. Latch K and stud M must be flush.
Close free arm cover 28. It must always be kept closed during sewing so that the photo-electronic bobbin thread monitor can function properly.

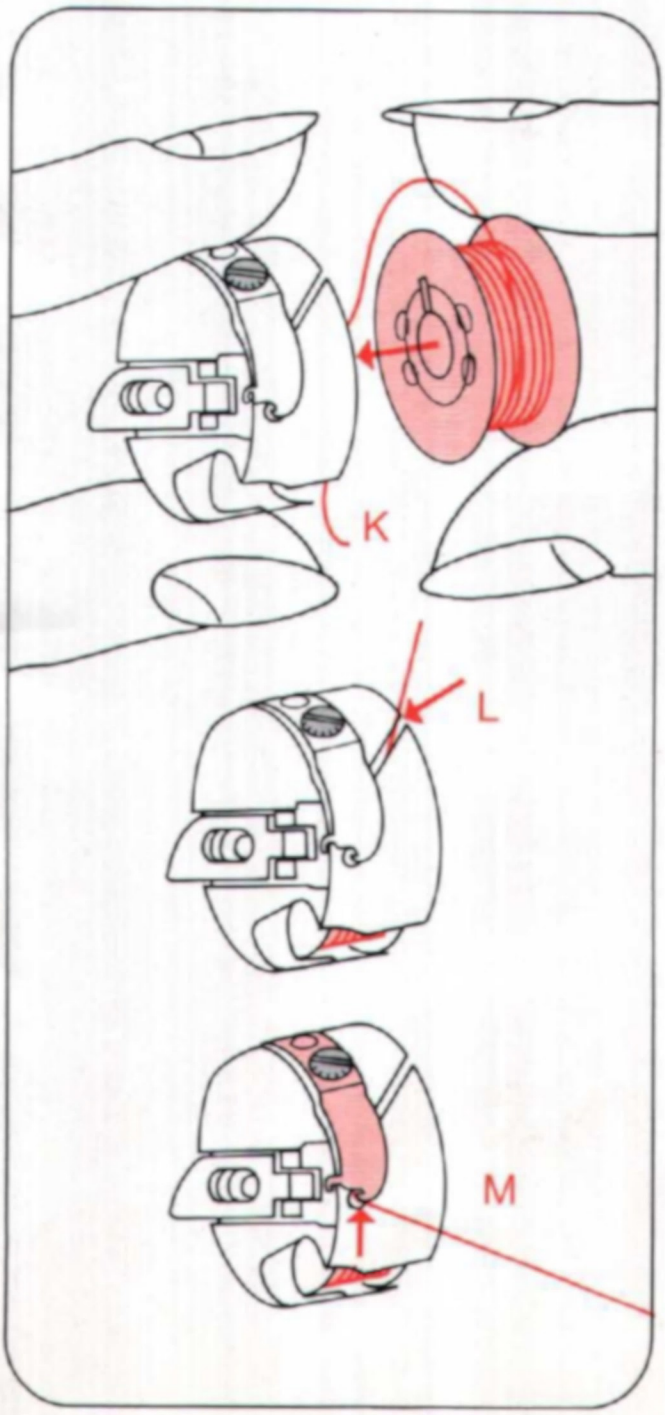

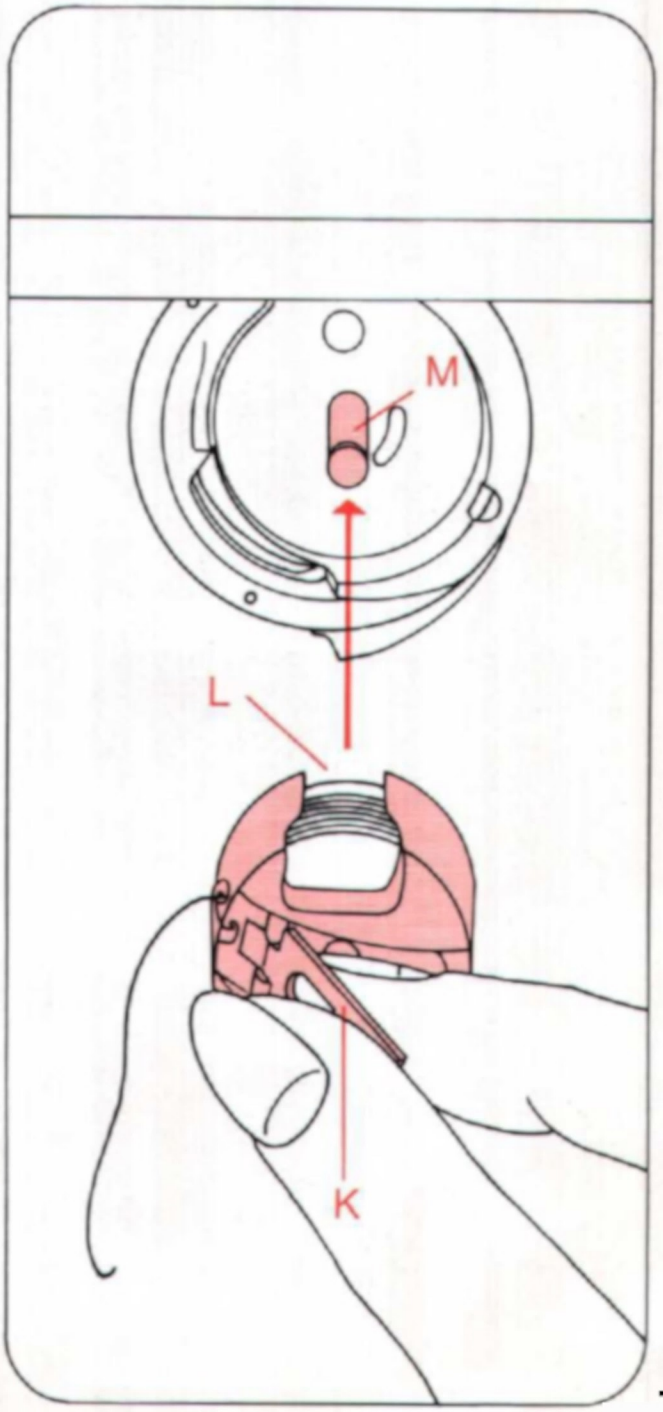

Upper threading

Raise presser bar lifter 37 to its horizontal (K) position. Swing spool holder 13 back. Place a spool of thread on the holder and push the unreeling disc on the spool pin. The accessories include two unreeling discs, one for small spools, the other for large spools. The large unreeling disc is always used together with the small one. Pull the thread from the spool and draw it into thread guide 11, slot K, thread guide 31, take-up lever 7, thread guide 30 and the right guide of needle holder 16.

Note on twin needles

For two-needle sewing jobs attach the second spool holder for the second spool of thread (page 2).

Both threads are passed through the thread guides together. However in slot K one thread is placed above disc L, the other below it, and at needle holder 16, one thread is pulled through the right guide, the other through the left.

Twin needles are threaded by hand.

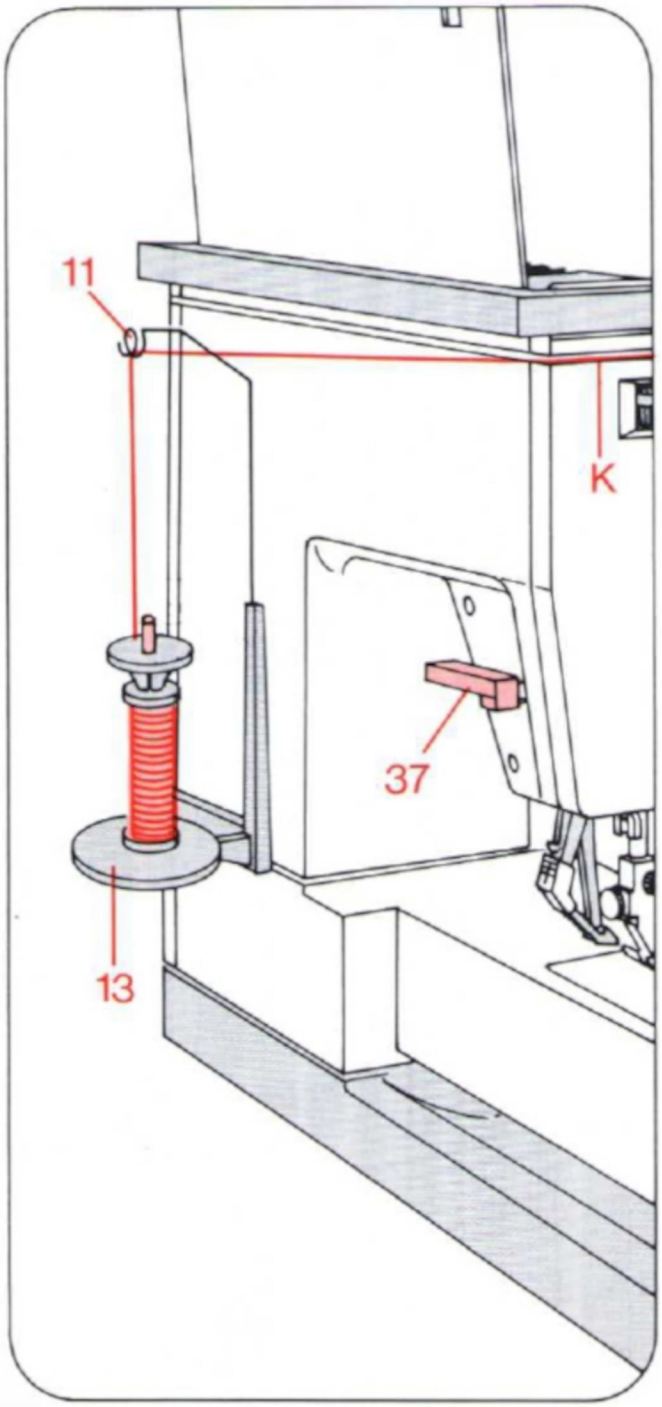

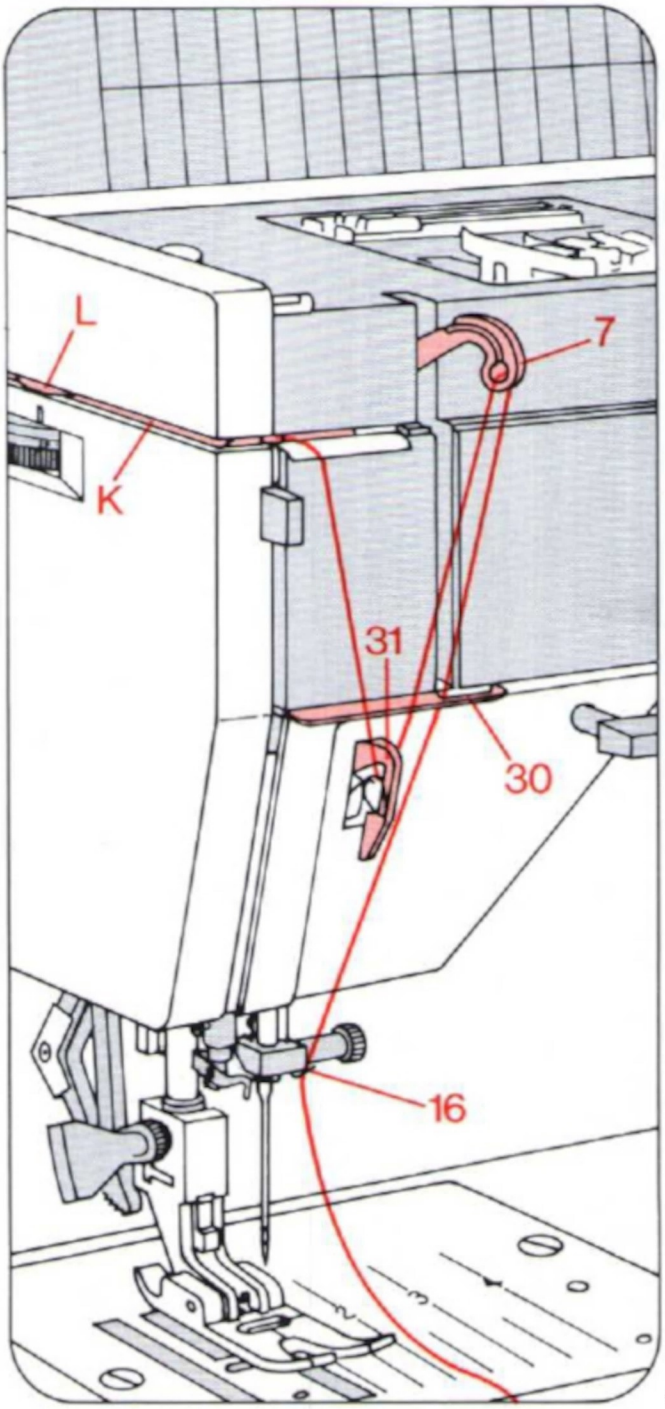

Threading the needle
Raise the presser bar lifter to the horizontal (Stopmatic) position. Push needle threader control 5 down as far as it will go. Place the needle thread under hooks K and L of needle threader 4. At the same time release control 5 and the thread. The thread is now pulled through the needle eye in a loop. Then pull the thread through the needle eye completely.

Drawing up the bobbin thread
Hold the needle thread a little taut. Push presser bar lifter 37 down to position L (page 5) and then up again. As you do so, the needle moves down and up again and draws up the bobbin thread. Pull the bobbin thread out of the needle hole and lay both threads toward the left and back under the sewing foot.

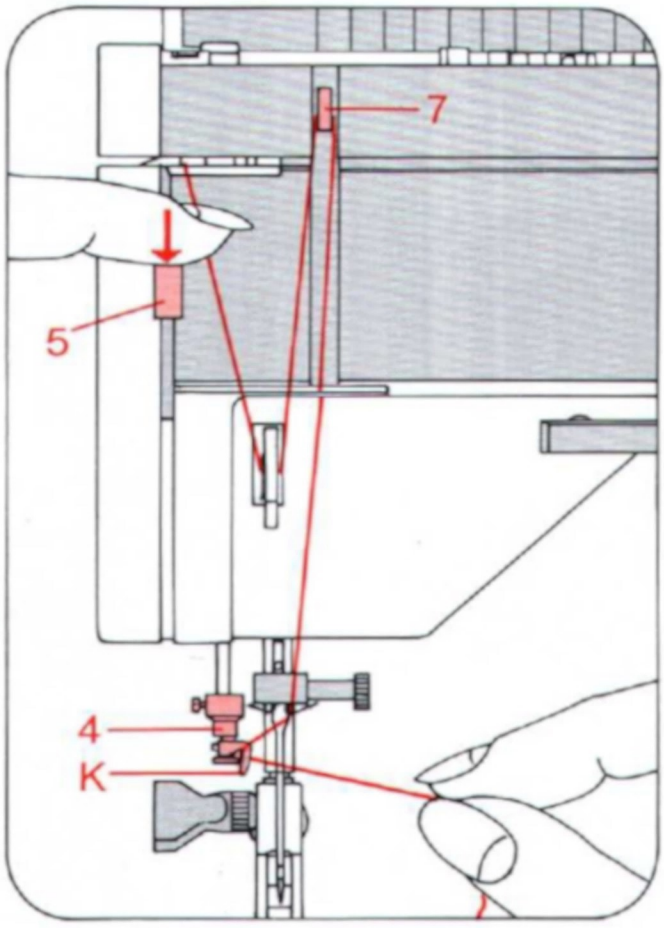

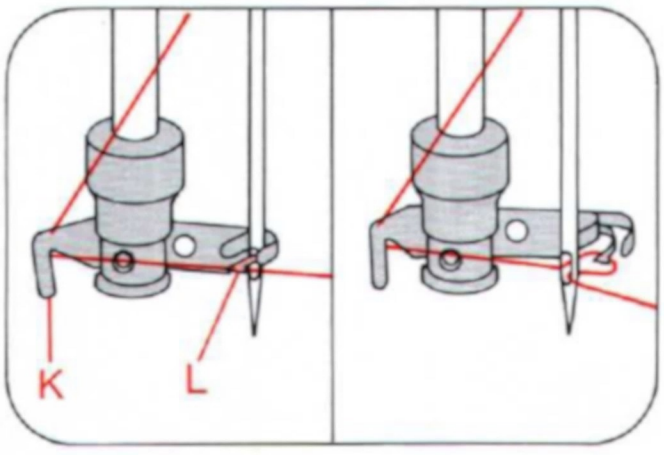

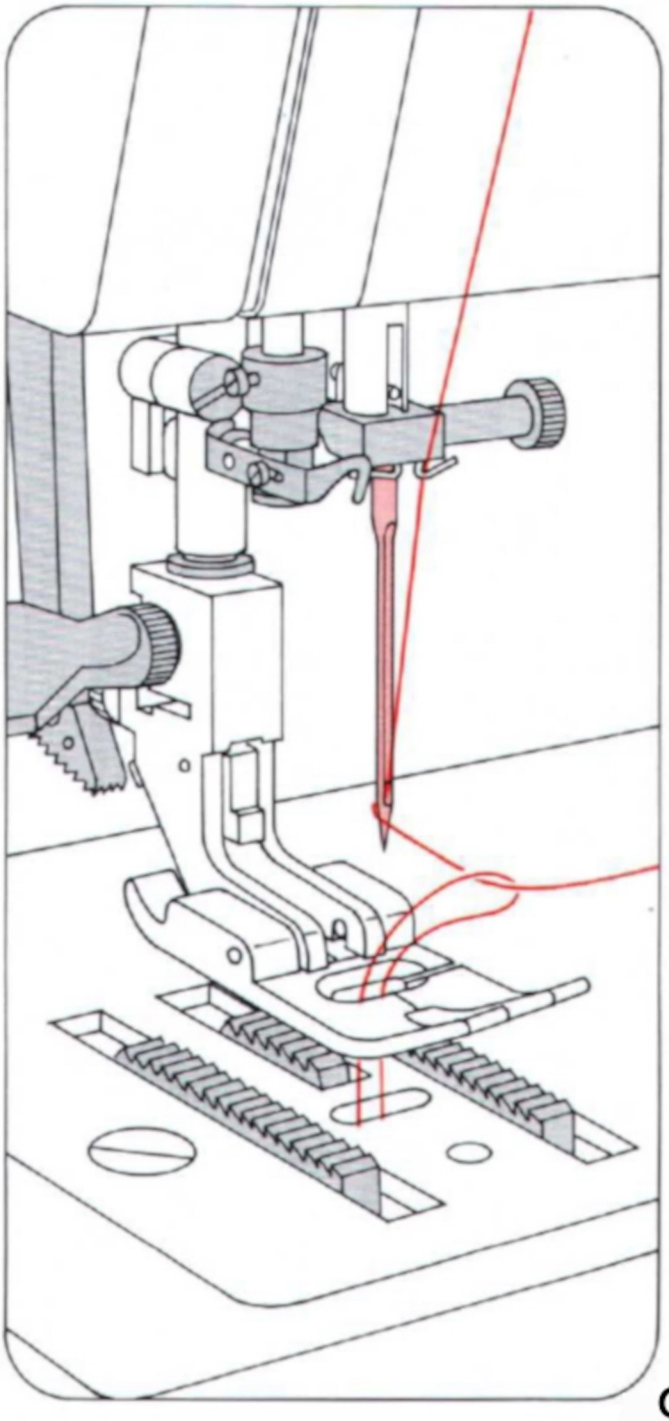

Upper tension (6)

K = Setting mark. The normal tension setting is in the light-coloured range between 3 and 5. The higher the number, the tighter the tension.

Lower tension

L = Regulating screw.
Turn it left for a looser tension, or right for a tighter tension.

M = Both tensions are correct.

N = Upper tension too lose or lower tension too tight.

O = Lower tension too loose or upper tension too tight.

The correct lower tension

Let the bobbin case with a full bobbin hang down freely by the thread. It must not slide down by its own weight, but should gradually move downwards when you jerk your hand upwards lightly. Once the lower tension has been set correctly, adjust the upper tension only.

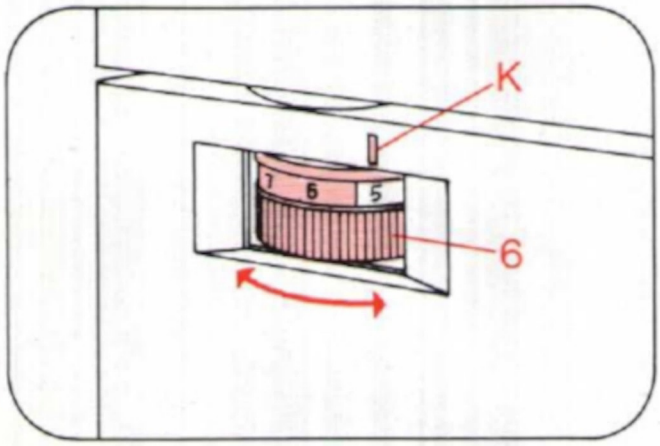

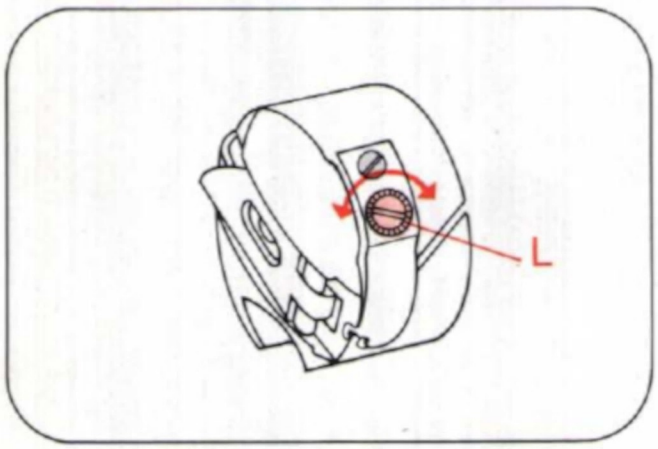

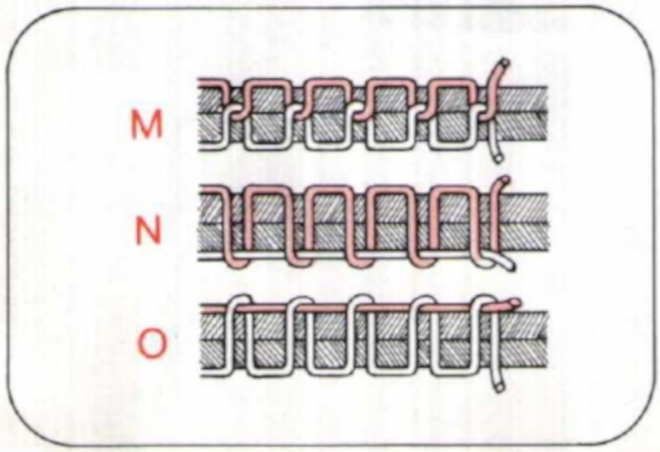

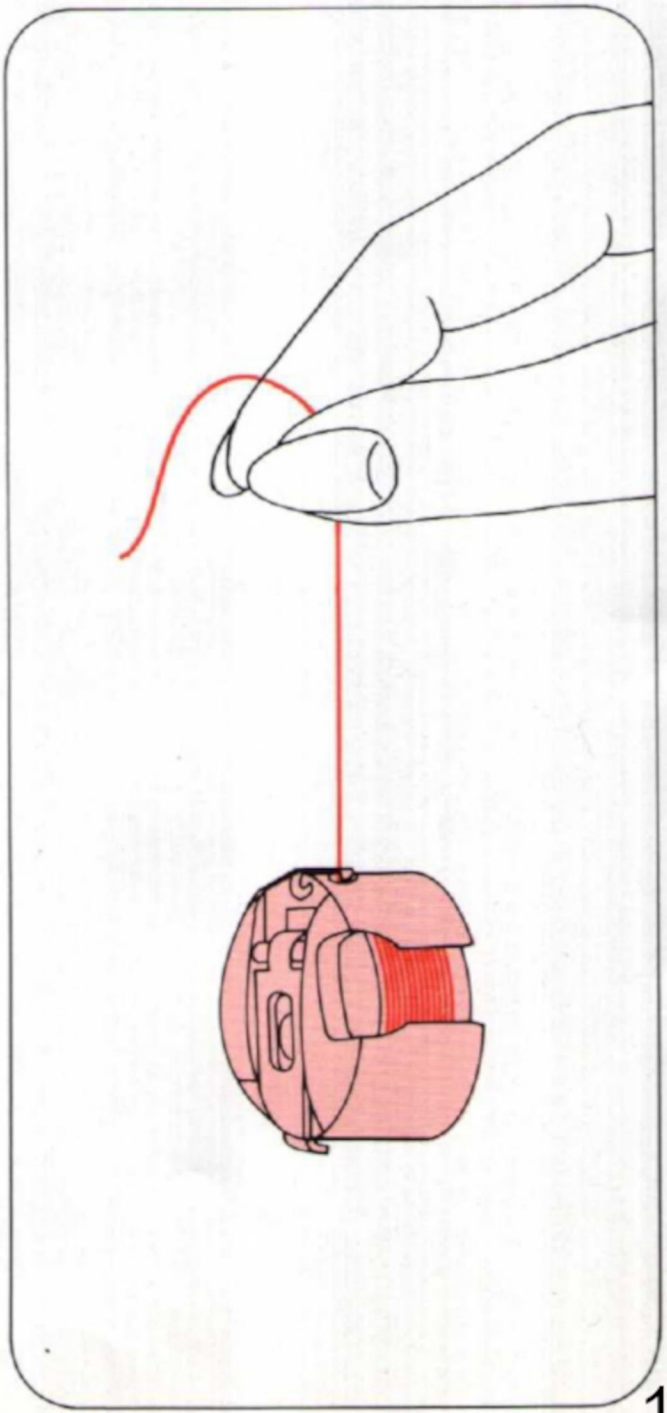

Dual feed
(Synchronized top and bottom feed)
This feed mechanism prevents one ply from creeping ahead of the other.
To engage: Push top feeding foot 36 down until it snaps into place. The green indicator light 40 remains on while the dual feed is engaged.
To disengage: Push the top feeding foot down slightly, then pull it out and let it swing up.

Thread cutter
The thread cutter is located at the back of top feeding foot 36.
Remove the work by pulling it backwards out of the machine. Place the threads over thread cutter K and pull them downwards to cut them.

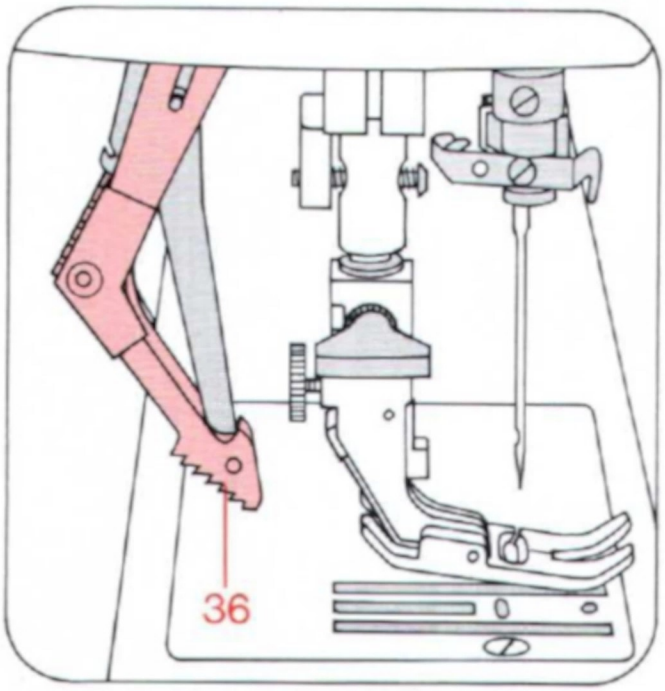

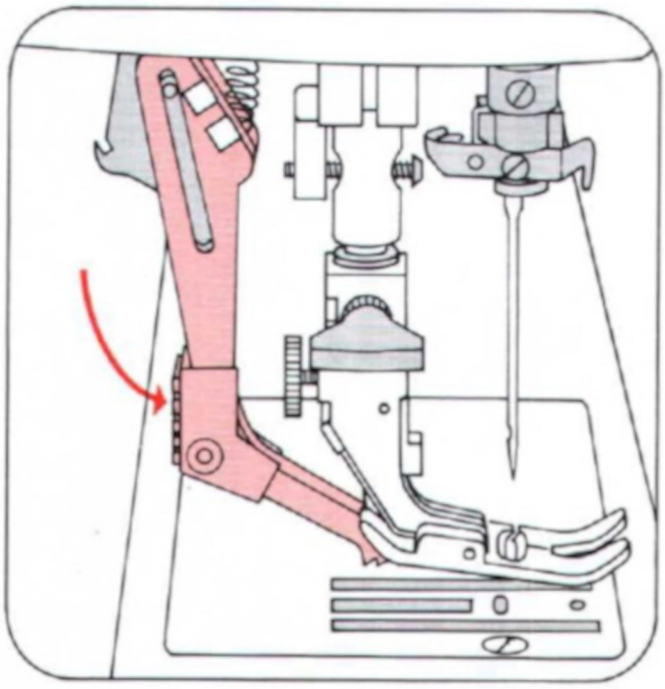

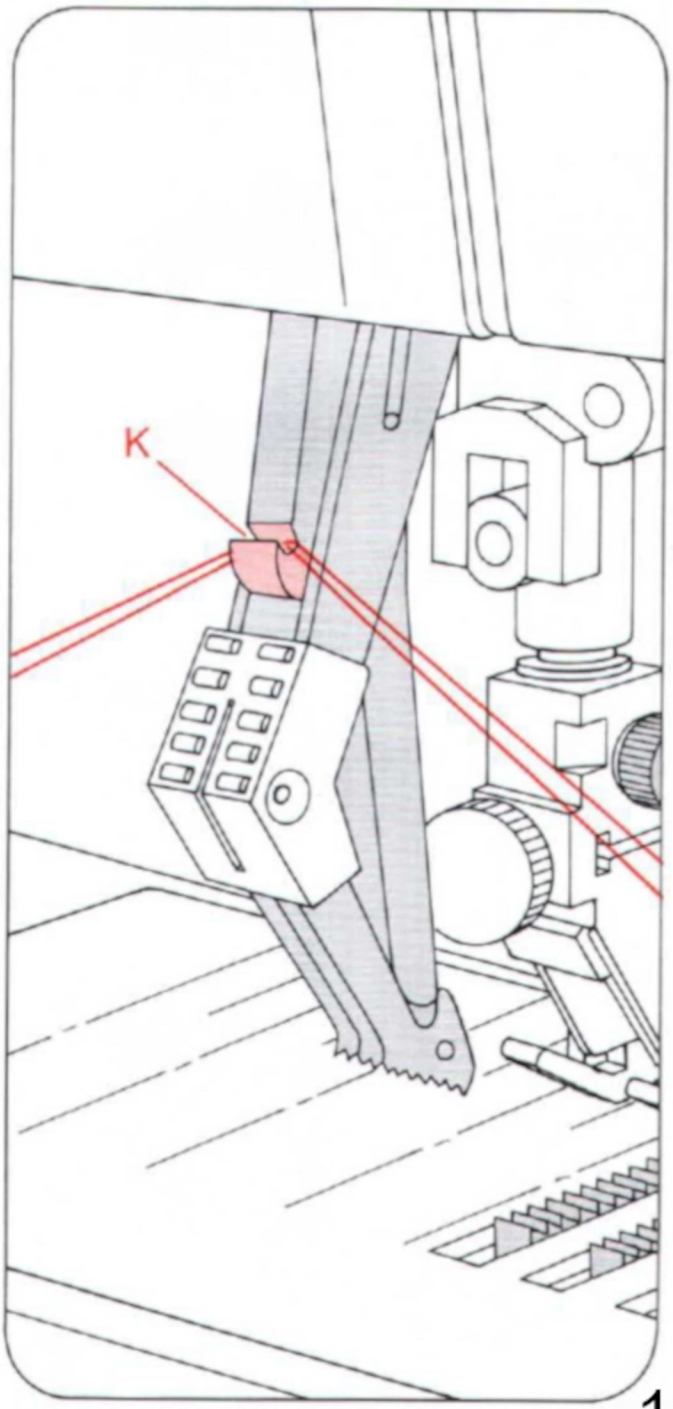

Master selector dial (24)
Turn the outer ring until the symbol of the straight or zigzag stitch desired is positioned above mark K.

Straight stitch
Straight stitches are located in the range from 0 to 4.

Zigzag stitch
Setting mark = K
Zigzag stitches are sewn in the ranges marked 5, 6, 7, 8 and 9.
The stitches at the right of these ranges are close together. Toward the left, the zigzag stitches become increasingly longer. In ranges 4 and 5 a long and extremely narrow zigzag stitch is made.

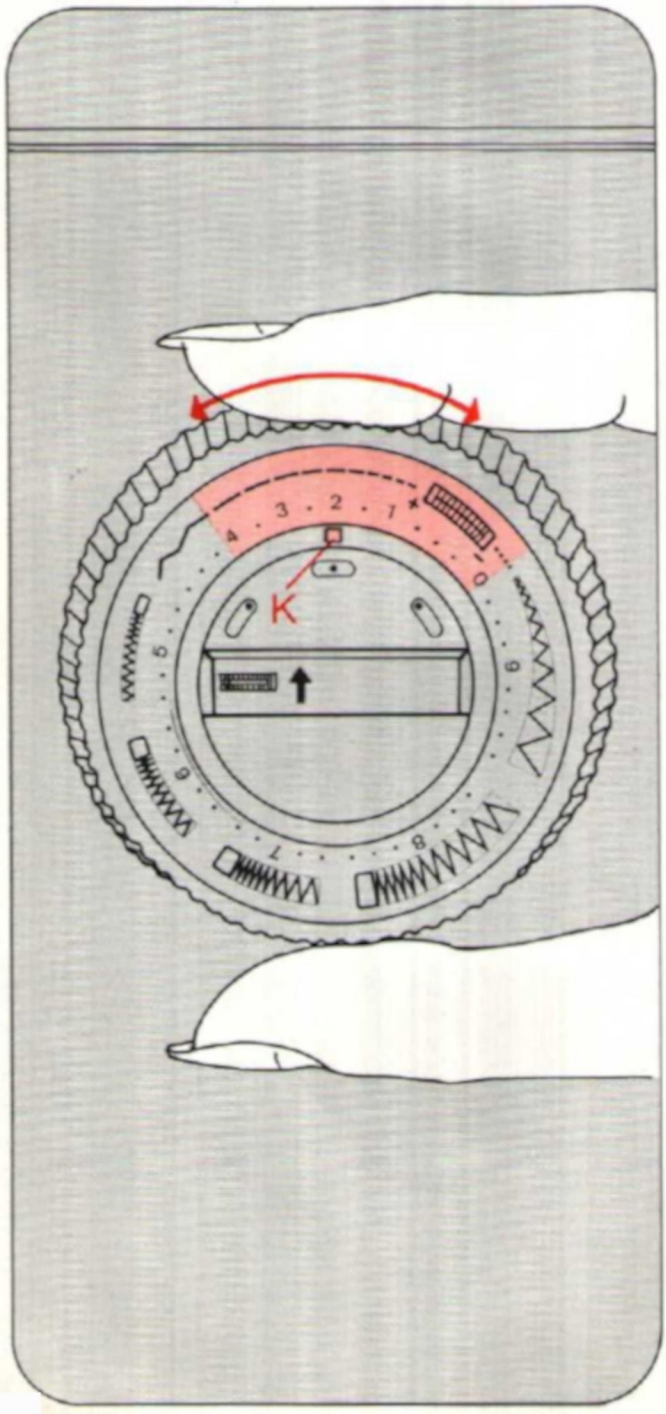

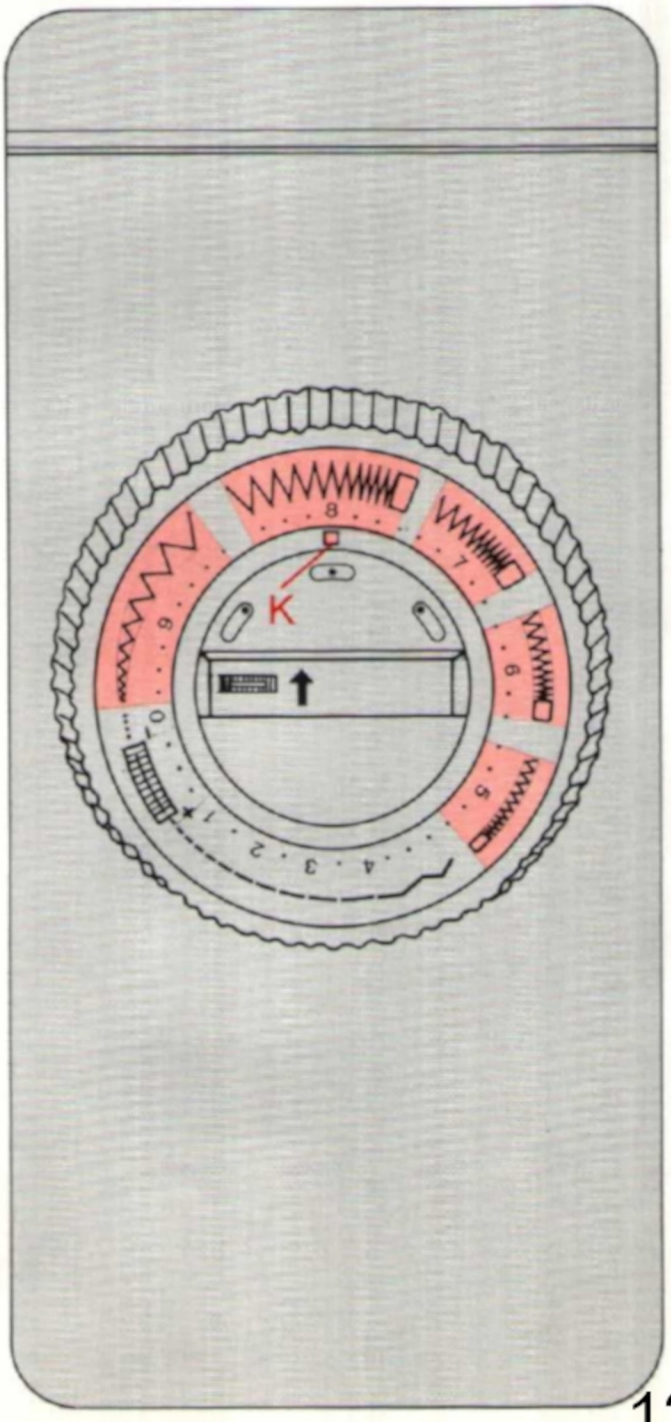

Needle position
The needle can be set to different positions in the needle hole.
Turn knob 25 until the symbol of the needle position desired is positioned below mark K.

= Central (normal) needle position

= Right needle position

= Left needle position

Reverse sewing and dropping the feed dog
Reverse-feed control 17 has the following positions:

K = Normal position

L = As long as the control is pressed, the machine sews backwards (for backtacking the end of a seam).

M = Vertical position. The machine sews permanently in reverse.

N = The feed dog is dropped (for embroidering, darning, etc.)

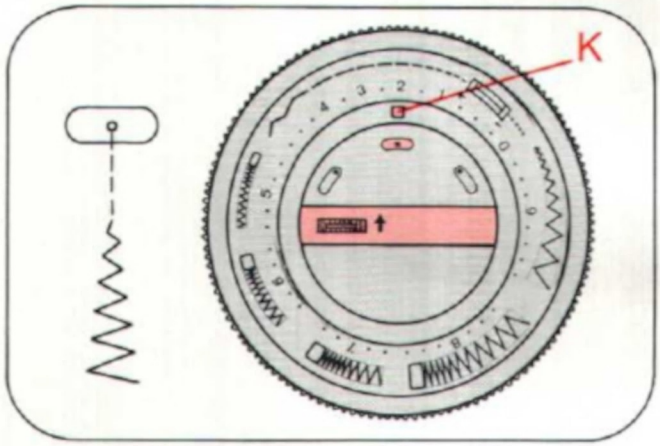

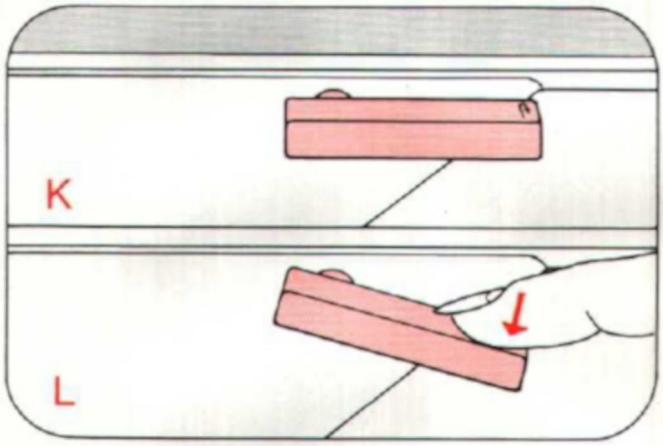

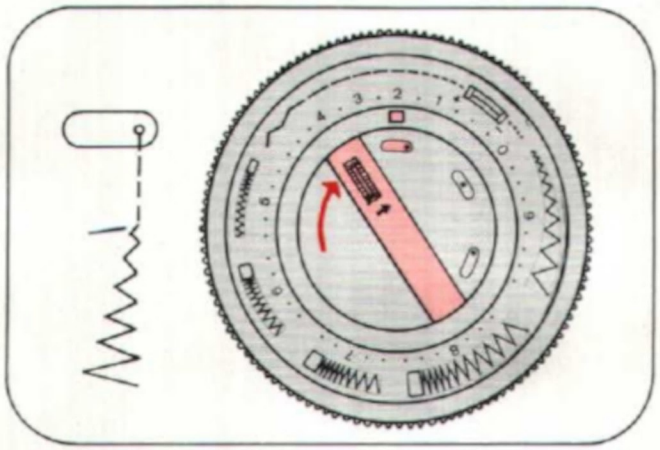

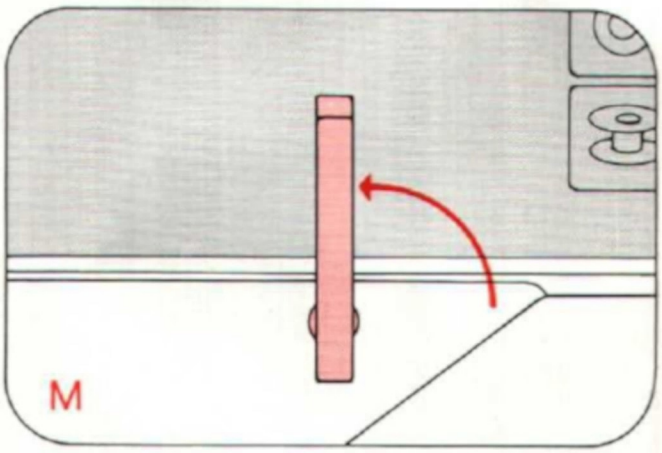

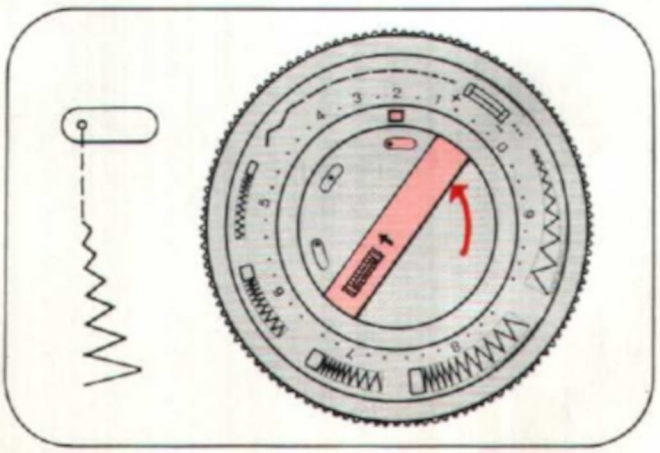

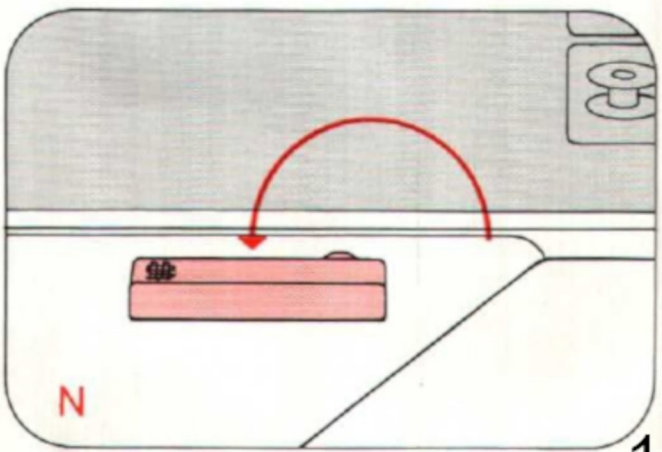

Changing the sewing foot
To release the sewing foot push the red button K. When attaching a sewing foot make sure studs L enter slots M.
Place the sewing foot under the sewing foot holder and hold it in place with your left hand. Lower the presser bar lifter and at the same time reposition the sewing foot so that studs L fit in slots M. If the sewing foot does not readily snap in place, press against screw N lightly.

Slot O and screw P are used for attaching an edge guide and the overlock-stitch attachment.

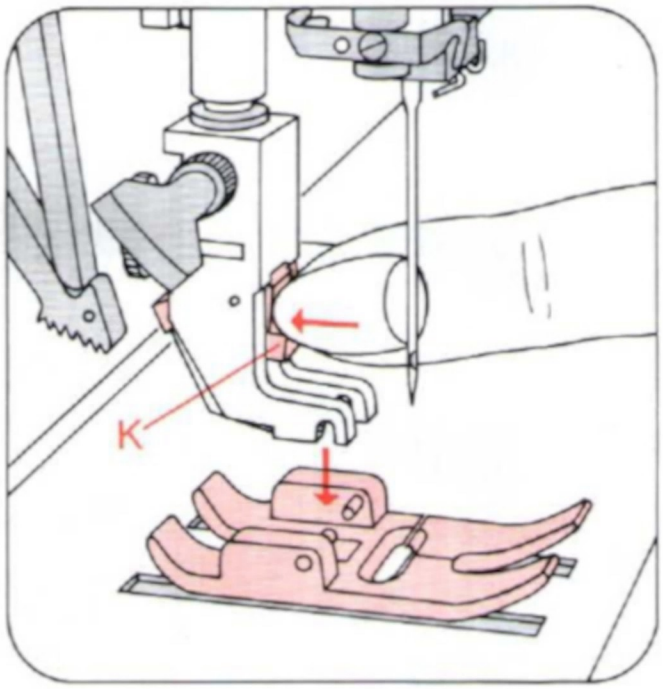

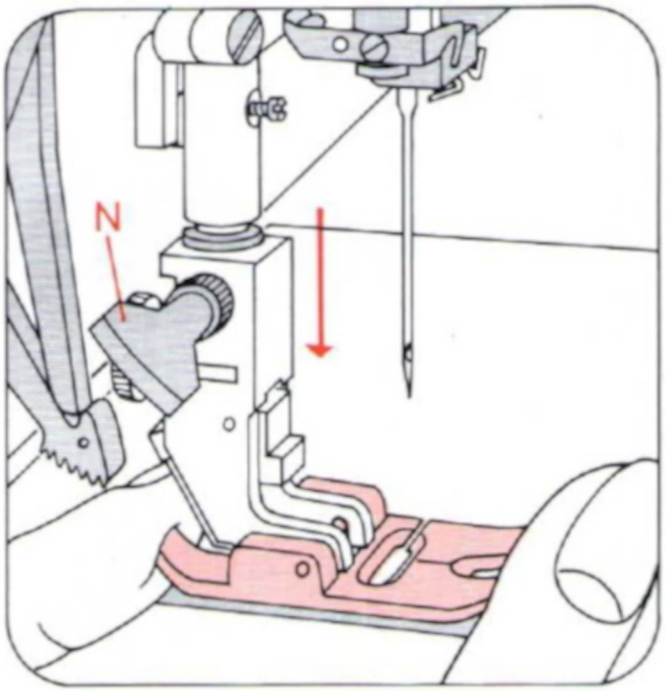

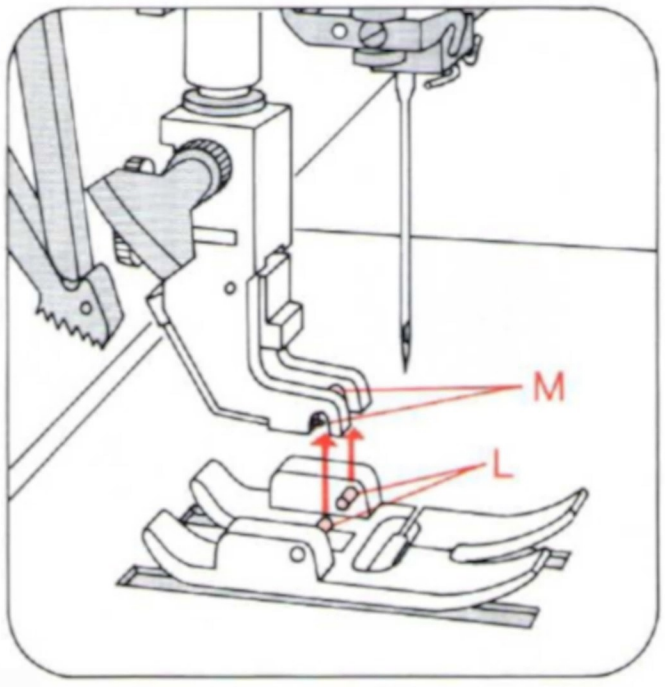

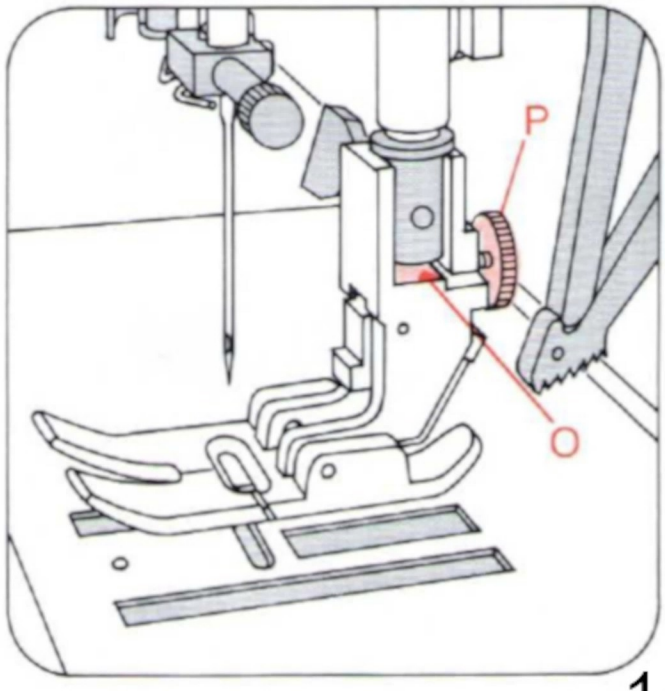

Changing the needle
Raise the needle bar. Then hold the needle, loosen screw K and pull the needle out of the needle holder. Insert a new System 130/705 H needle (with the flat side of its shank facing toward the back) and push it up into the needle holder as far as it will go. Tighten screw K.

Utility stitches
A = Elastic stitch
B = Blindstitch
C = Elastic triple straight stitch
D = Overlock stitch
E = Cross stitch
41 = Eraser button for releasing the pressed buttons

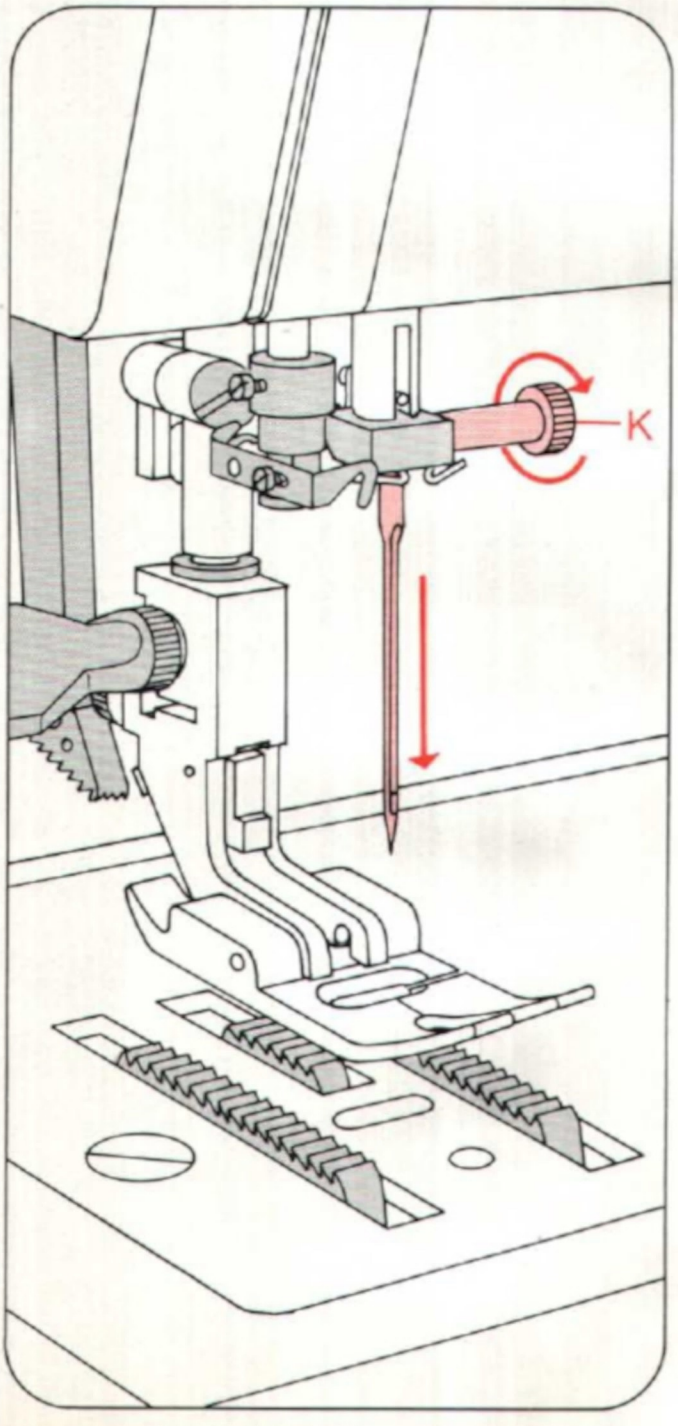

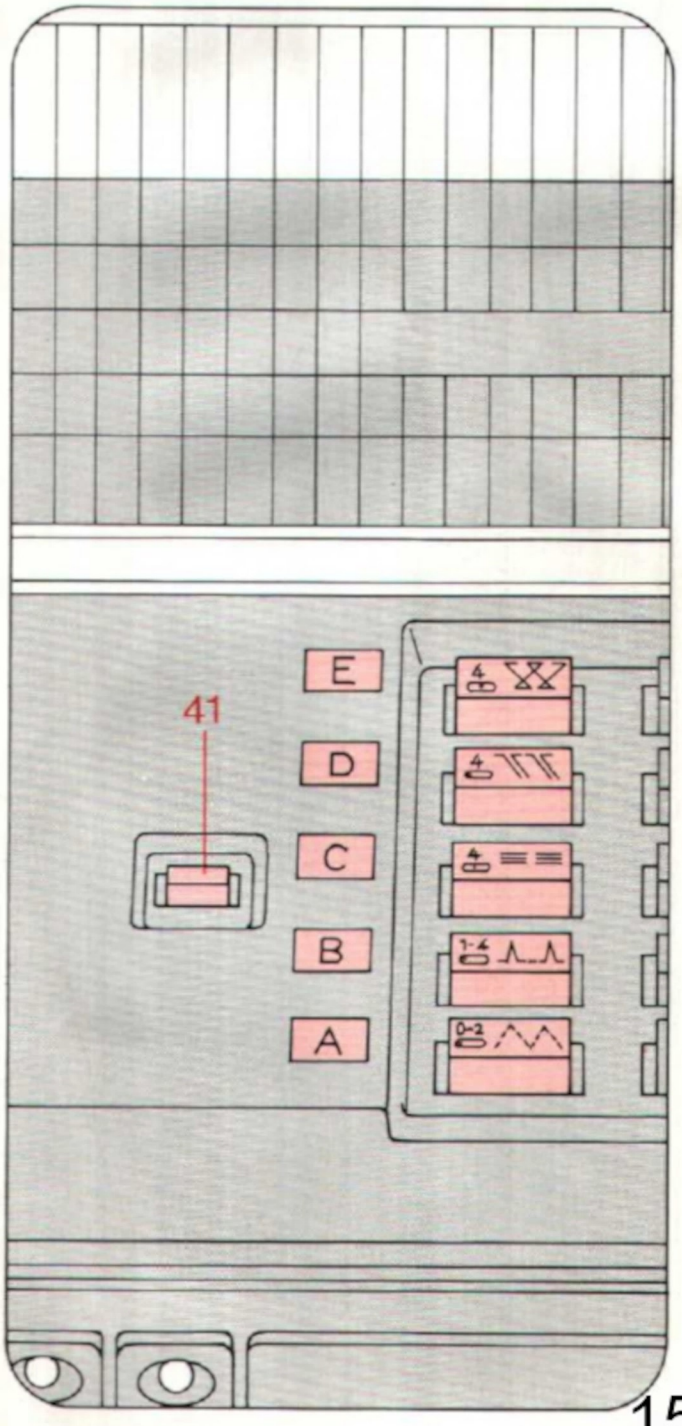

Utility-stitch setting
The setting of master selector dial 24/25 which is required for a specific utility stitch is indicated on the respective button.
K = Press the button
L = Turn the master selector dial

Utility-stitch combinations
Pushing two buttons simultaneously produces new utility-stitch patterns.

I Honeycomb stitch
Setting: buttons A + C, straight stitch 4, left needle position.

II Pullover stitch
Setting: buttons B + C, straight stitch 4, left needle position.

The various utility-stitch combinations are shown in the stitch chart on the inside of the hinged top cover.
For utility-stitch combinations A to E in conjunction with ornamental-stitch button J turn pattern start selector wheel 20 to the start-of-pattern symbol (see next page).

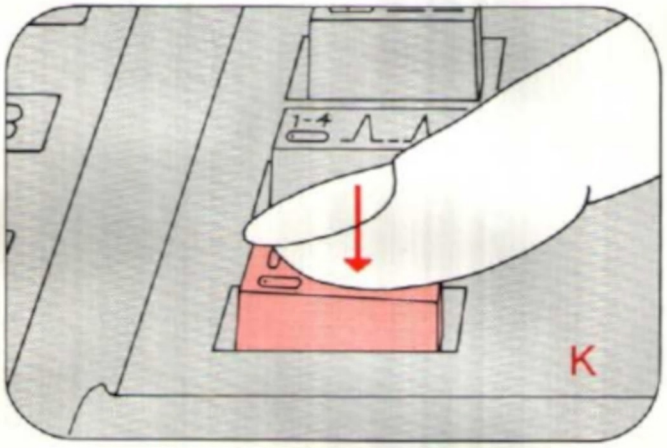

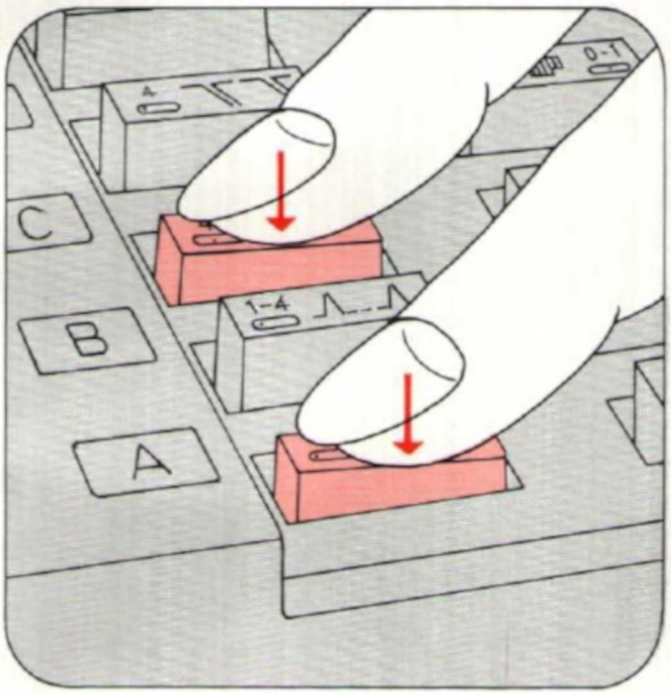

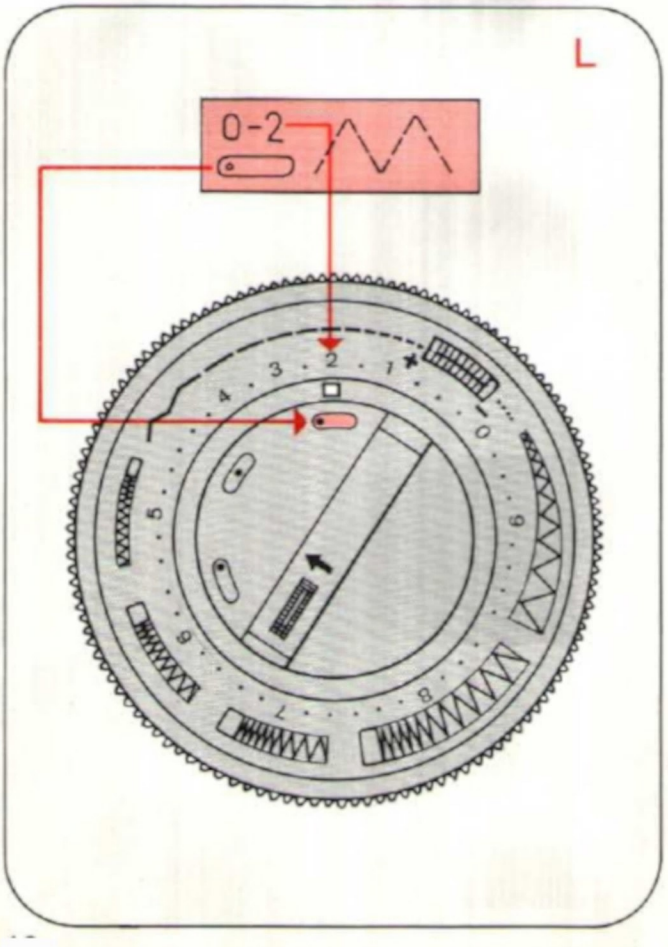

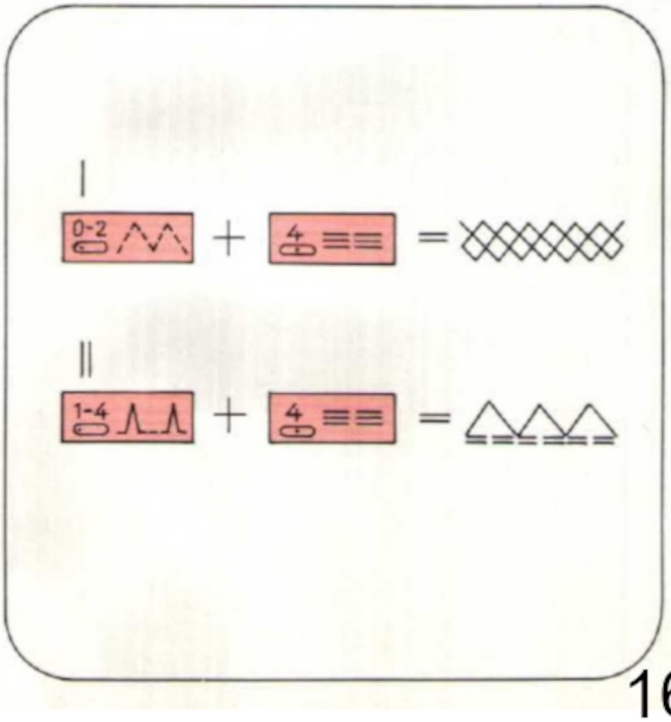

Ornamental stitches
Buttons F to J show ornamental stitches. (They are set as utility stitches.)
The pattern length can be varied by turning wheel 22 in the range from 10 to 18. (When turned to symbol ◁0▷ the ornamental stitches are disengaged.)
Wheel 20 serves to set the machine at the beginning of the pattern. (For setting see drawing.)
Letters K and L denote the setting marks.

The following symbols are used on pattern start selector wheel:

- Beginning of pattern
- One quarter of pattern
- Half the pattern
- Beginning of small square when sewing ornamental stitch H
- Three quarters of pattern

Ornamental-stitch combinations
Pushing two or three buttons simultaneously produces new ornamental-stitch patterns. (See stitch chart on the inside of the hinged top cover.)

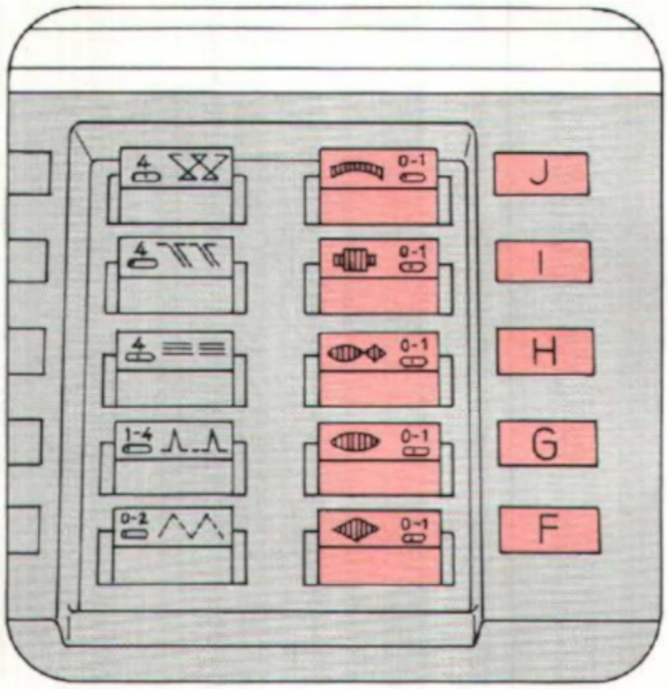

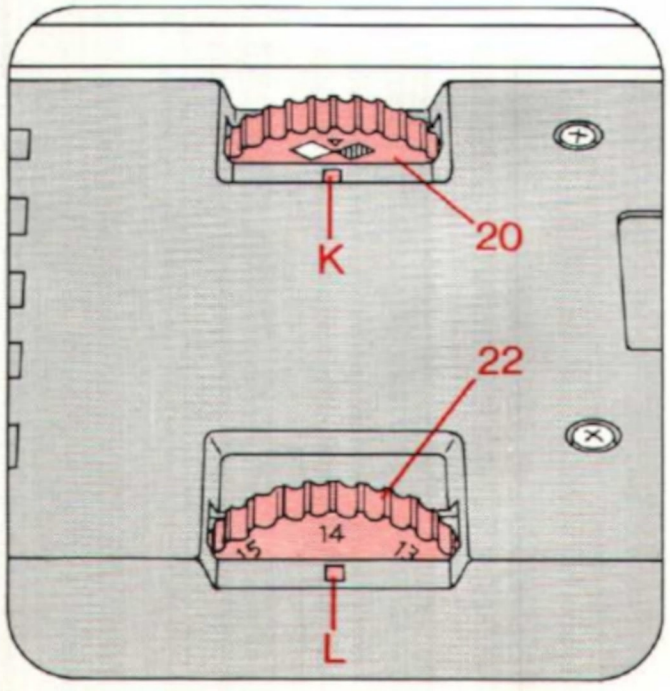

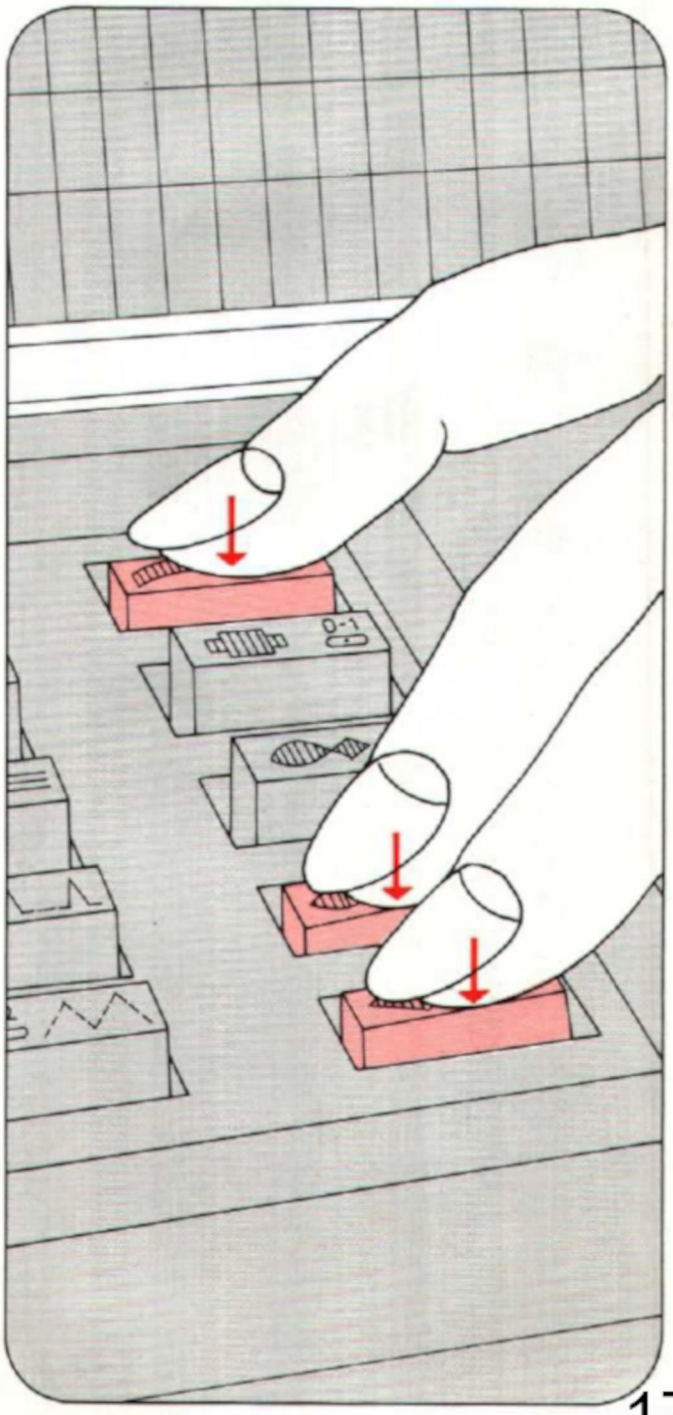

Sewing feet

0 = Normal sewing foot:
For all sewing jobs which require no special sewing foot.

1 = Clear-view foot:
For ornamental sewing and sewing on buttons.

2 = Overlock foot:
To be used together with the overlock-stitch attachment.
If used alone, the overlock foot is ideally suited for finishing and reinforcing edges.

2 = Blindstitch foot

4 = Zipper foot

5 = Buttonhole foot

The top feed can be engaged when sewing feet 0, 2 and 3 are used.

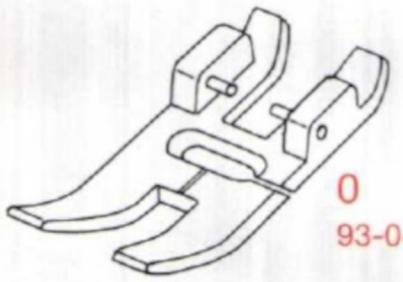

0
93-042 967-91

1
98-694 864-00

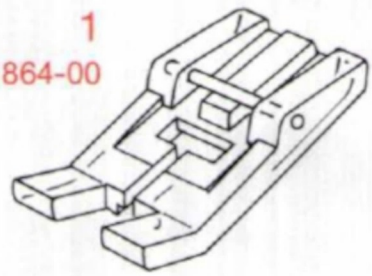

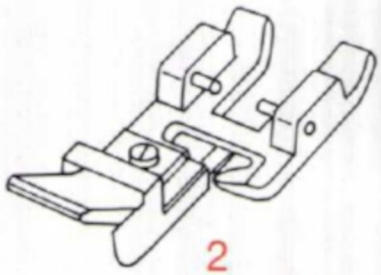

2
98-694 861-00

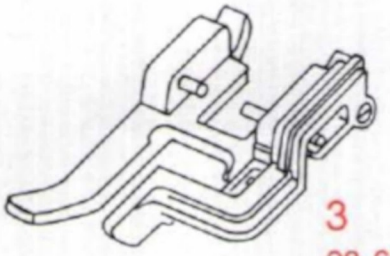

3
98-694 866-00

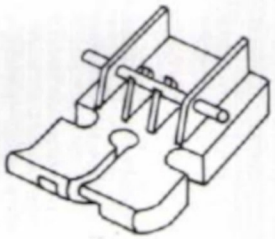

4
98-694 859-00

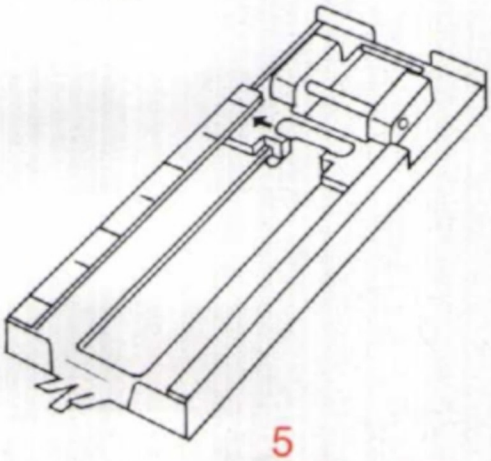

5
98-694 870-00

Special sewing feet

Zipper (and edge stitching) foot

Attach the foot offset to the right or left. Set the needle position accordingly. Guide the workpiece so that the edge of the zipper foot moves along the zipper chain on the right or left, respectively.

Illustrations

Top: Foot in left-edge position, needle in left position. Left edge of foot moves along zipper chain.
Bottom: Foot in right-edge position, needle in right position. Right edge of foot moves along zipper chain.

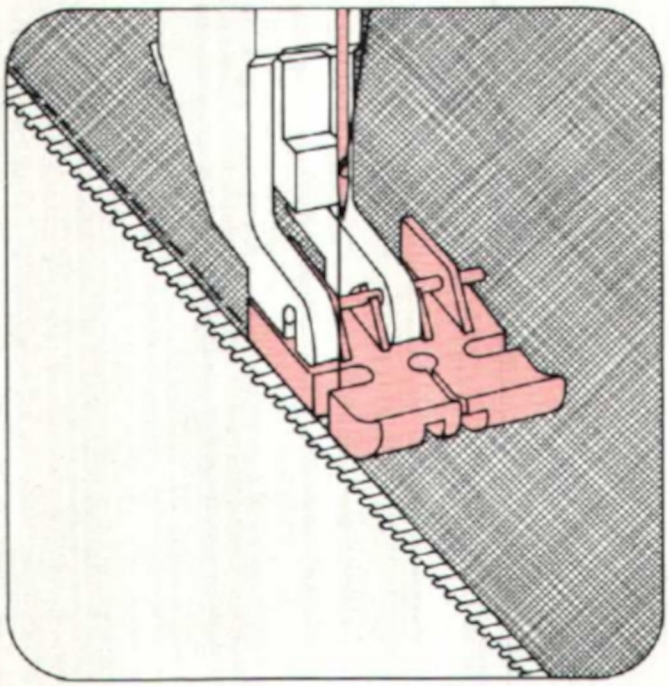

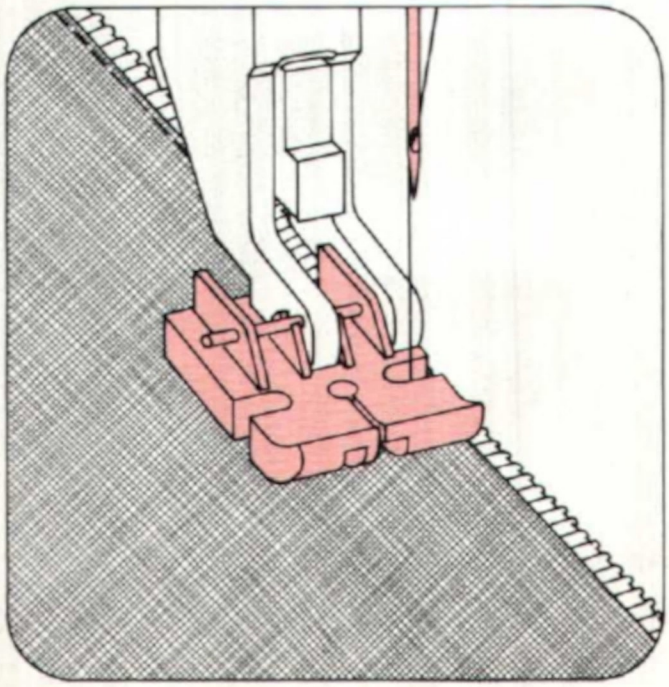

The needle hole in the middle of the foot is used for inserting zippers concealed so as to resemble a seam. For this purpose, attach the foot in the central position and set the needle in its central position. The zipper chain moves along the grooves in the sole of the sewing foot.

Illustrations

Top: When the **blindstitch foot** is used, guide the folded edge of the material along edge guide K. The needle position is regulated by turning the needle position knob accordingly.
Bottom: How to use the **overlock-stitch attachment** is described on pages 20 and 21.

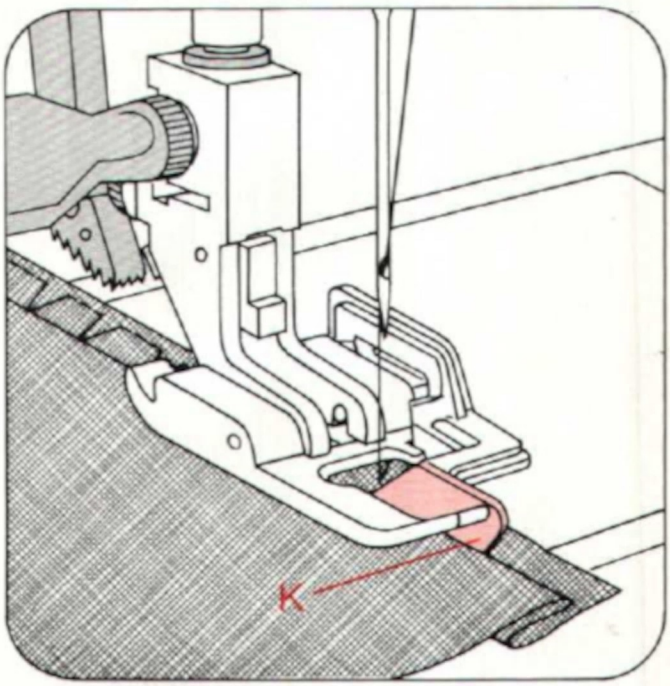

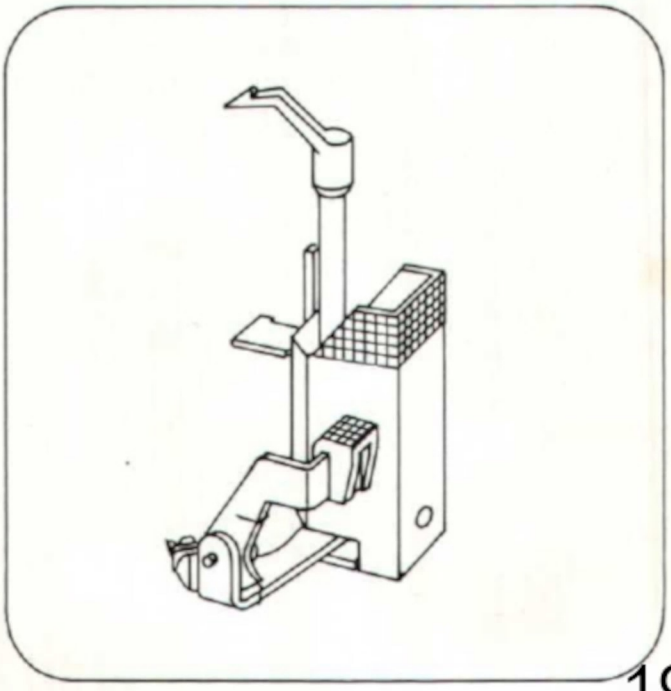

Overlock setting
Attach overlock foot K (top ill.). Leave the foot in its lowered position. Turn screw L out a few turns. Attach overlock-stitch attachment so that mounting ridge M enters the slot in the needle holder (bottom ill.). Push the attachment up as far as it will go and tighten screw L.

Press overlock button D (top ill.). Set the needle to the left position and turn the master selector dial to 4 (bottom ill.). Set the needle thread tension at 3.
The overlock seam is sewn with the top feed disengaged.

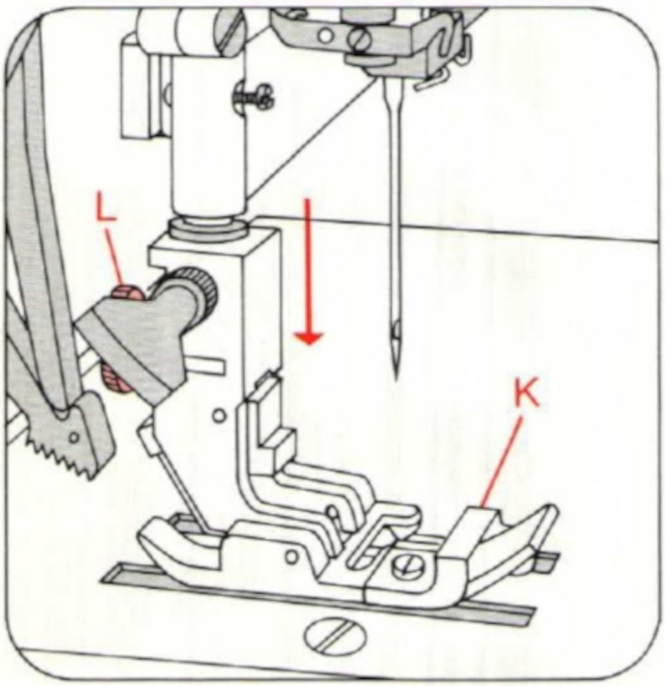

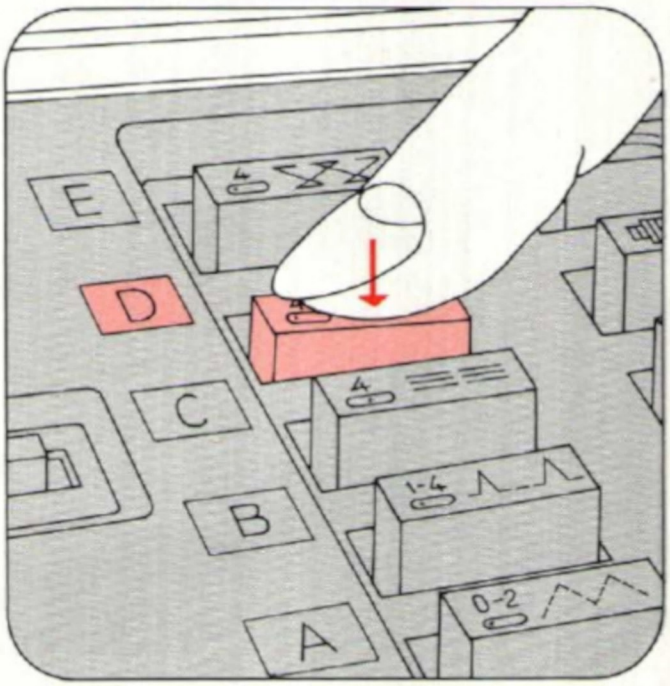

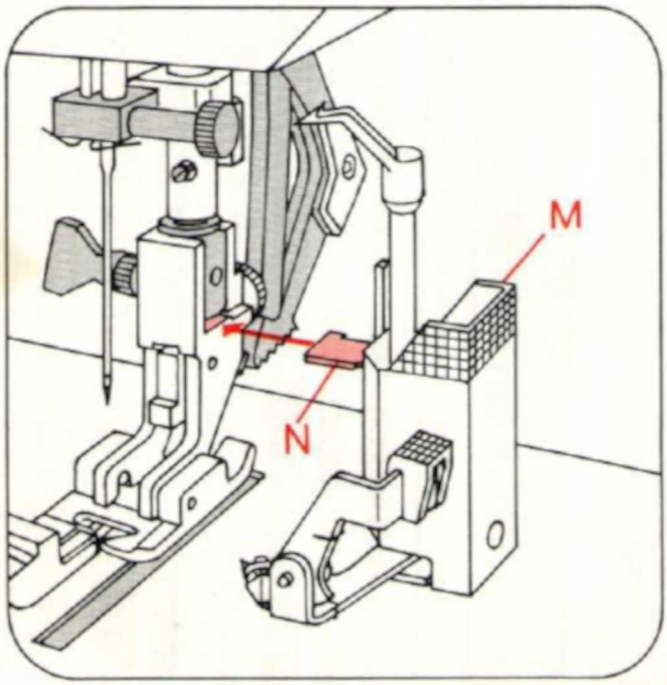

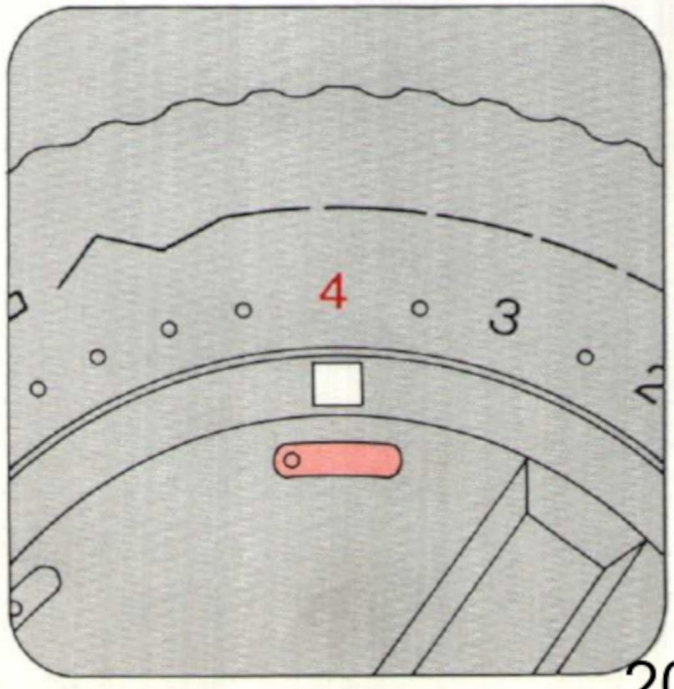

Overlock seam

The overlock stitch is used to sew along the edge and at the same time finish it with an overedge-stitch seam resembling an "edge thread". Insert the material so that its edge runs along edge guide O (top ill.). At the end of the seam operate the Stopmatic control and raise the sewing foot. **Then press ejector lever P** (bottom ill.) to release the thread from the thread puller.

Remove the work by pulling it toward the rear (ill. at top right) and trim the threads.

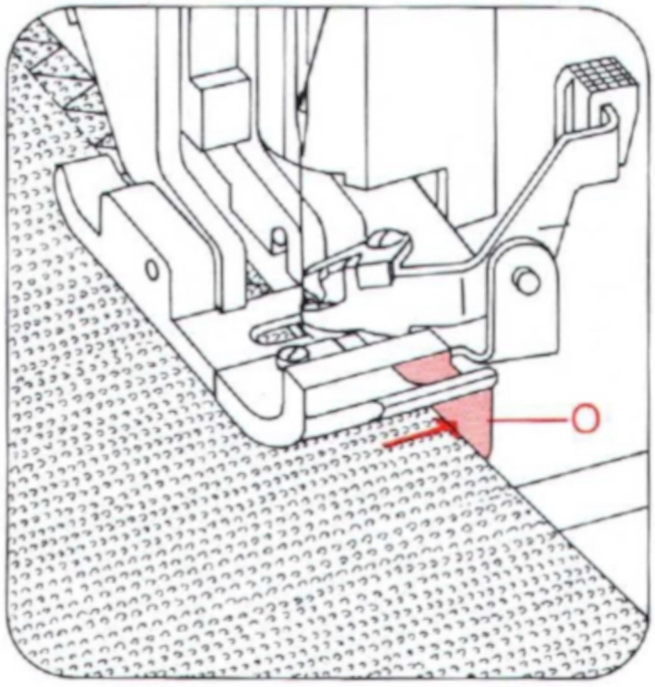

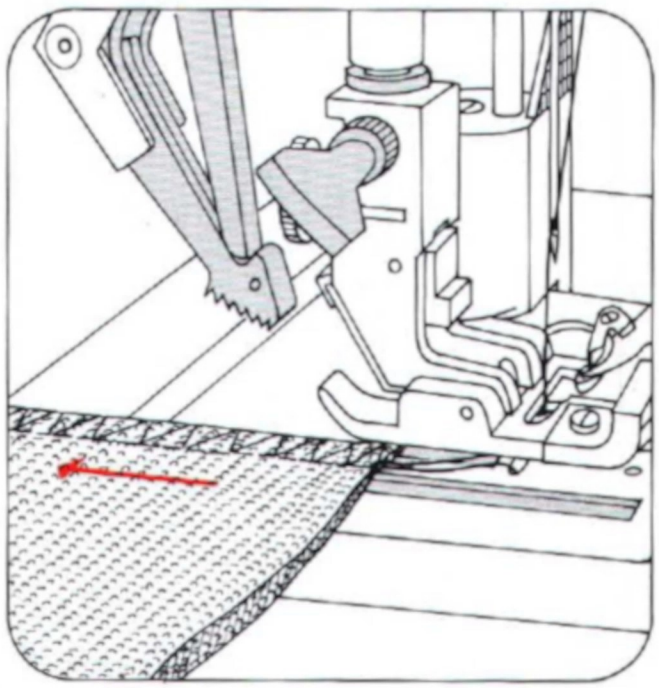

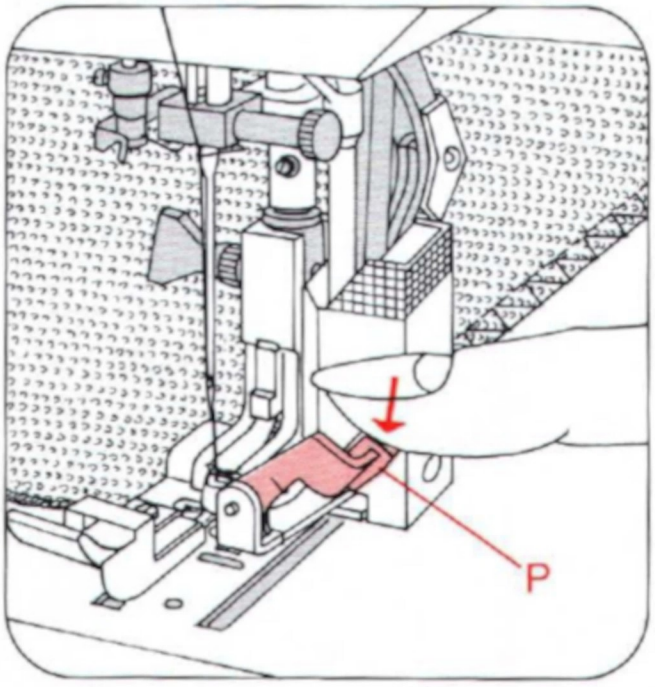

Important:

The overlock-stitch attachment must only be used with the machine set as described on these pages.

Buttonhole setting
Attach the buttonhole foot. Release the push buttons. Insert a filler cord as follows: Place it over rear lug K (top ill.), pull it taut, and clamp it in front lug L. As you sew, arrow M moves along scale N. This serves to determine the buttonhole length (bottom ill.).

Turn knob 25 to the position shown in the top illustration. Restore this setting at the beginning of each buttonhole. Turn the knob clockwise only. Regulate the stitch density by turning the master selector dial in the buttonhole range from + to — (bottom ill.). The stitches must be packed together closely.
Reduce the needle thread tension by 1 to 2 numbers.
Begin by sewing a buttonhole on a piece of scrap material.

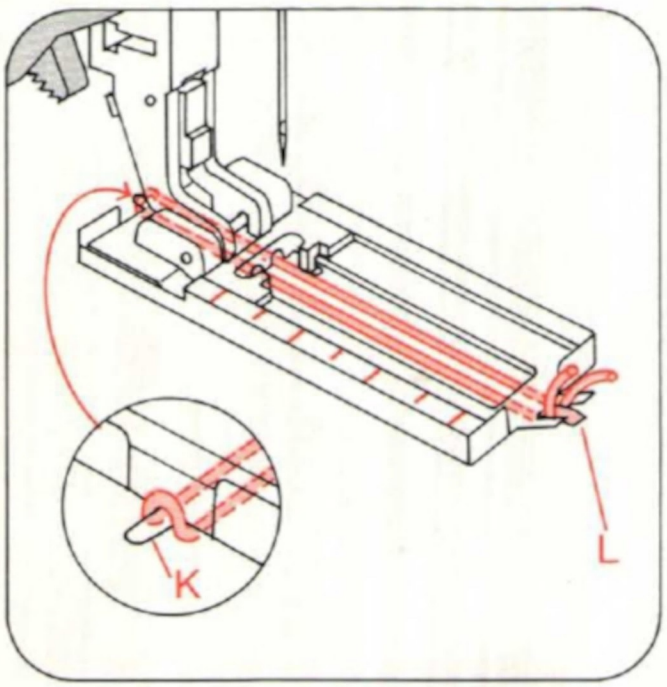

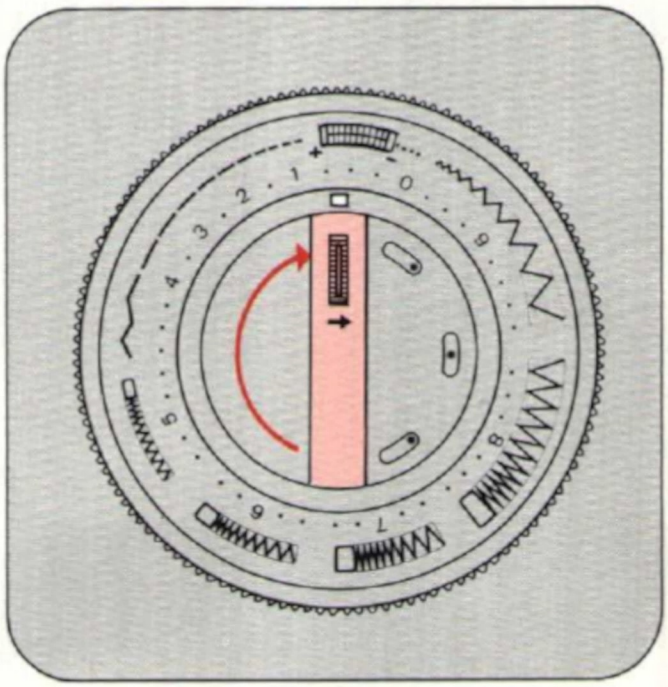

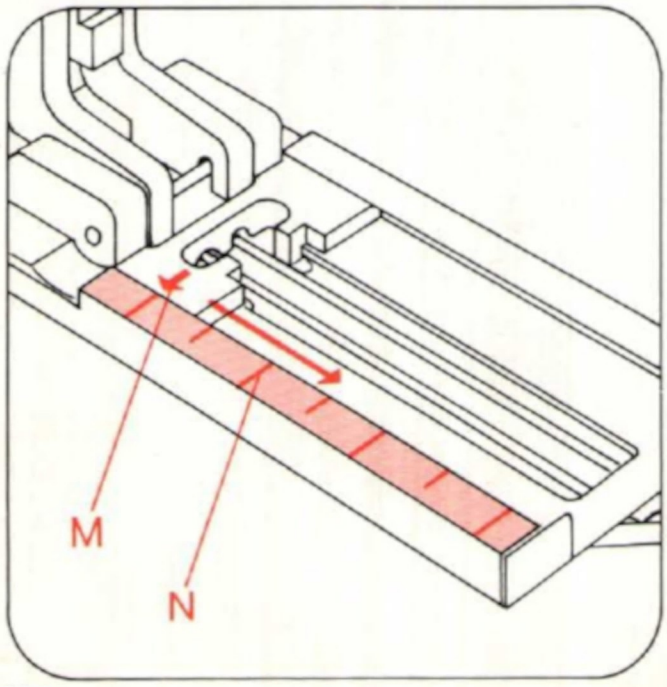

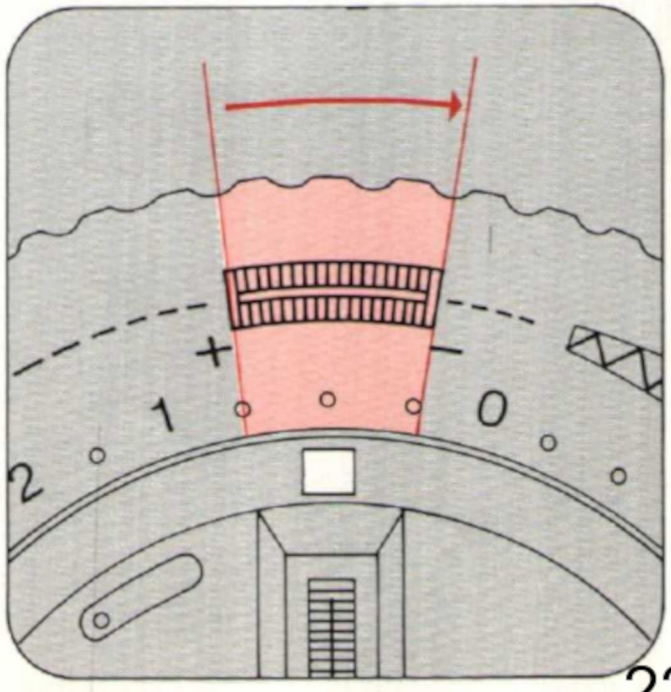

Sewing buttonholes

To afford a better view of the work the buttonhole foot has been omitted from the drawing below.

Pull the bottom of the buttonhole foot forward as far as it will go.

O = Sew the first buttonhole seam.

P = Push button 26 and keep it depressed until the machine has sewn 4 to 6 bartacking stitches, then release the button.

Q = Sew the second seam the same length as the first. (For this, the machine is set automatically.)

R = Push button 26 and keep it depressed until the machine has sewn 4 to 6 bartacking stitches. Then release the button and sew a few tying stitches.

S = Raise the presser bar lifter to the horizontal position, remove the work and trim the threads. Pull the filler cord taut and trim it too.

T = Cut the buttonhole open with your seam ripper, but be careful that you do not damage the bartacks and the seams.

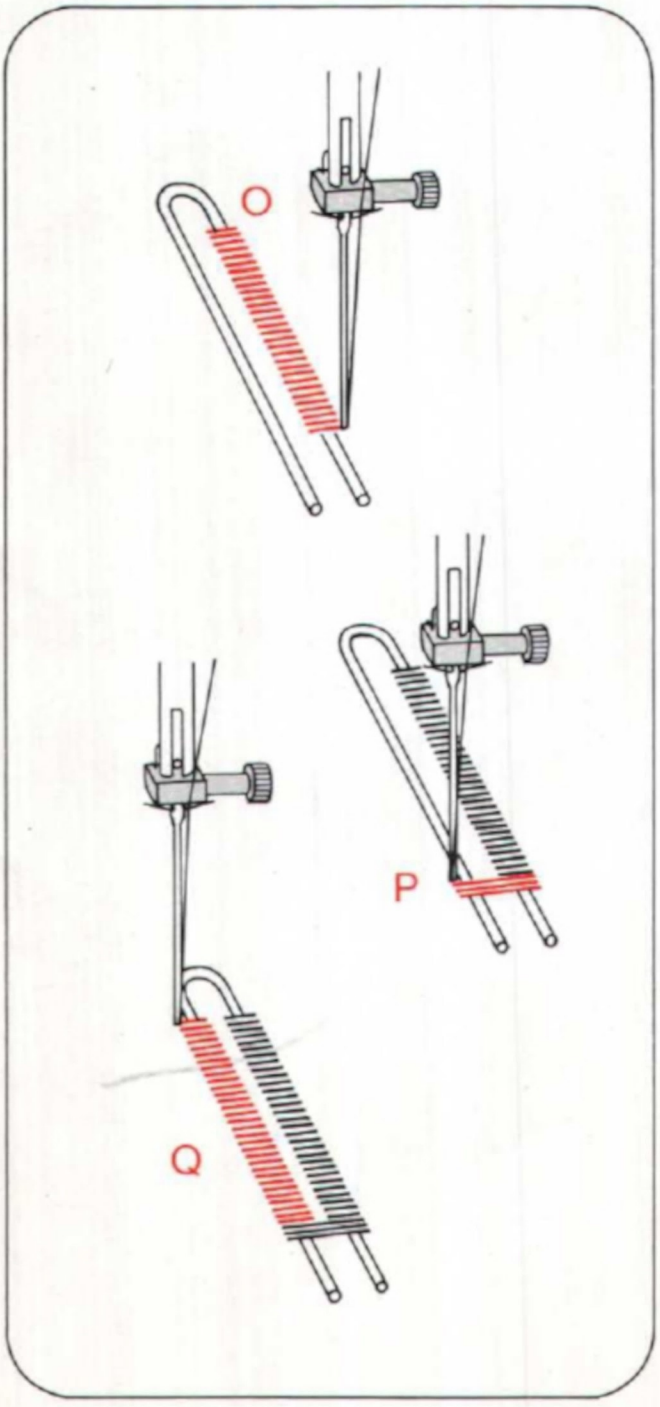

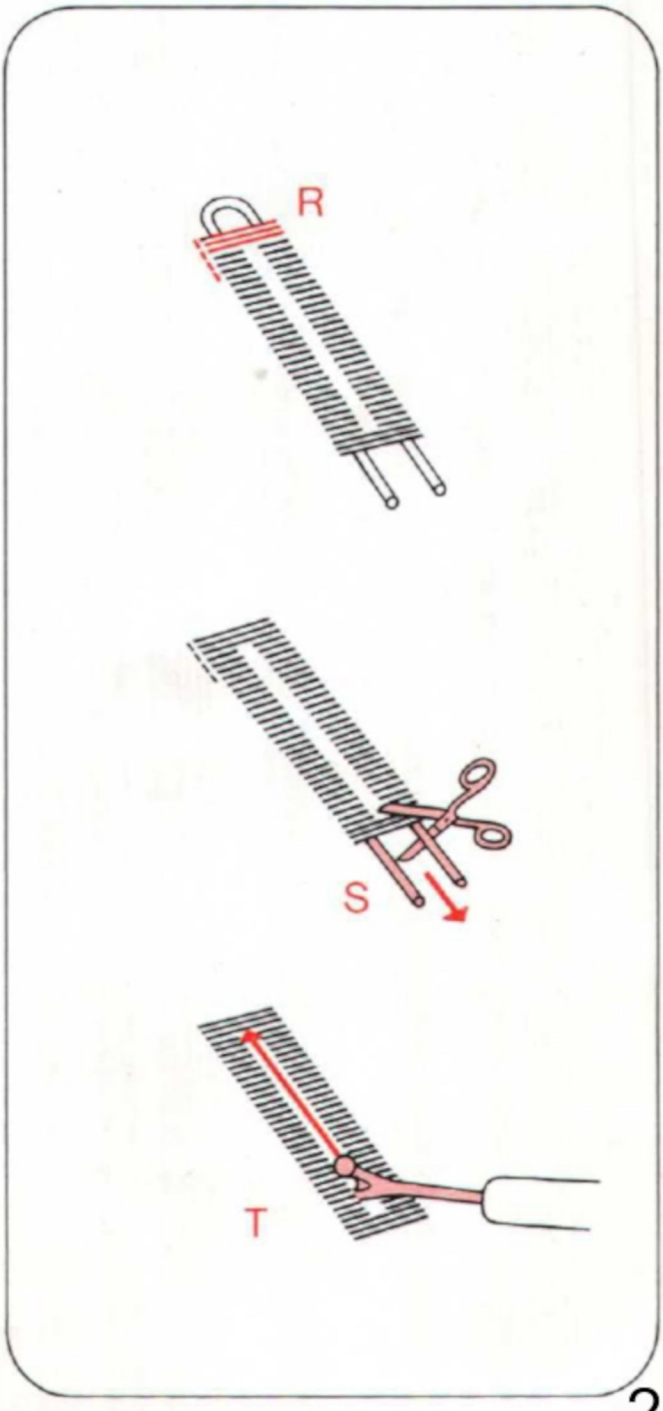

Changing the light bulb
Push the light bulb up, turn it towards K and pull it out. Insert the new bulb so that its pins slide in slots L. Push it up and turn it toward J.

Cleaning and oiling
Take out both screws of needle plate 18 and remove the latter. Open free arm cover 28 and remove the bobbin case. Clean the feed dog and the parts in the vicinity of the sewing hook with a soft brush.
Do not oil the machine because it requires no maintenance. All you have to do is put a drop of oil in the hook raceway now and then (see ill.). Clean the bobbin thread monitor as instructed on page 27.

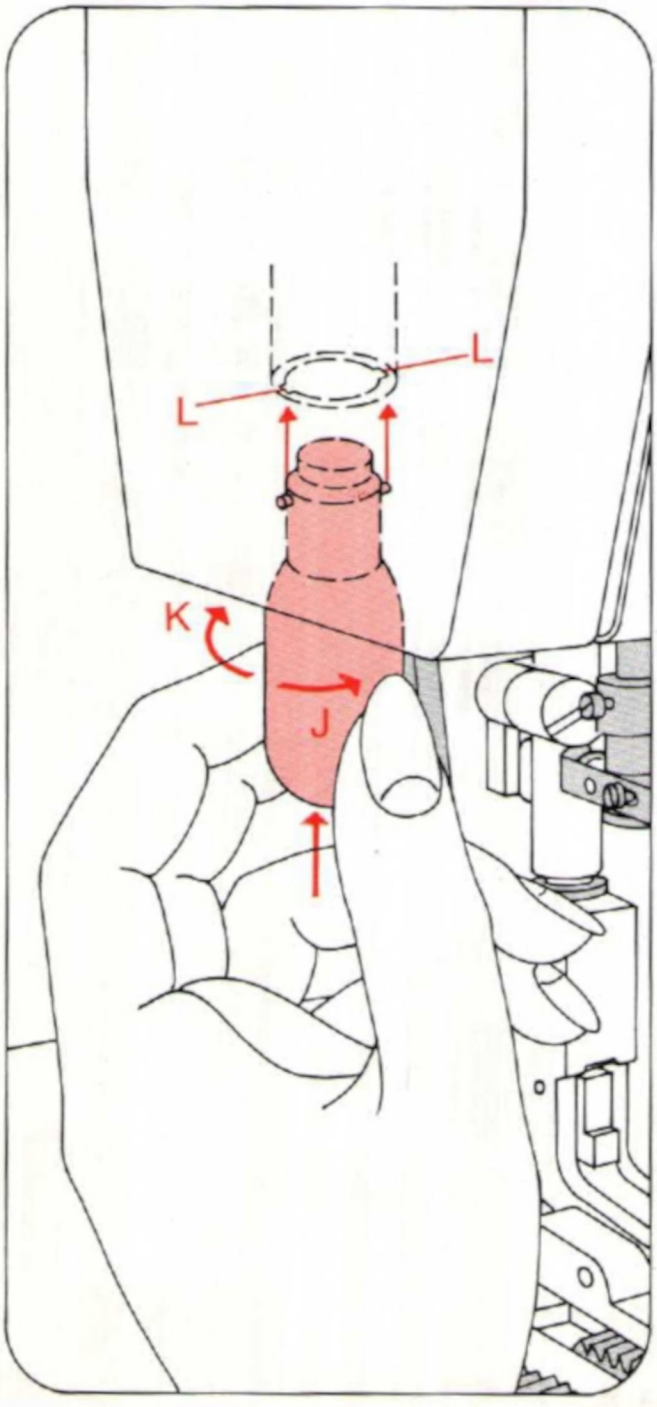

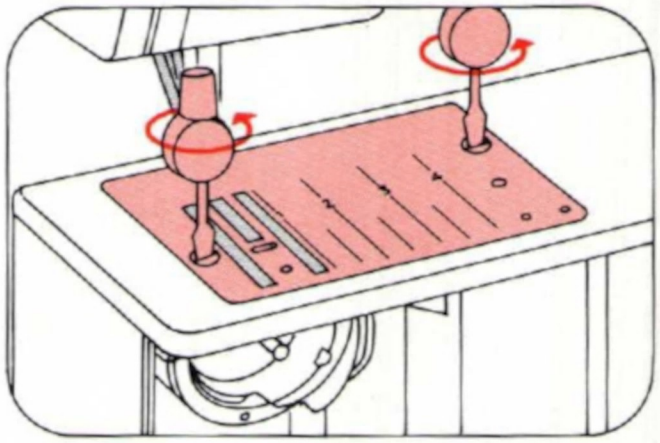

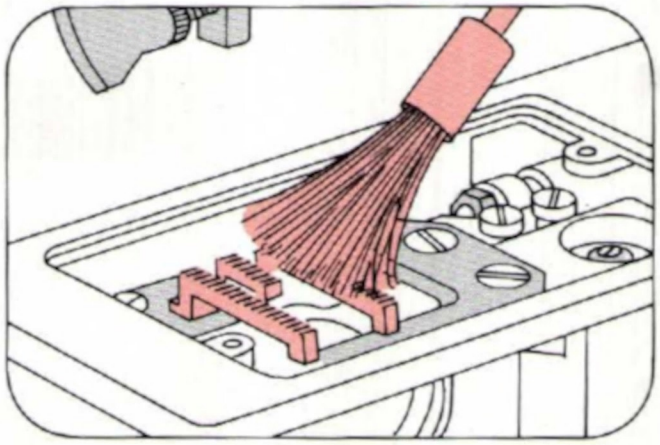

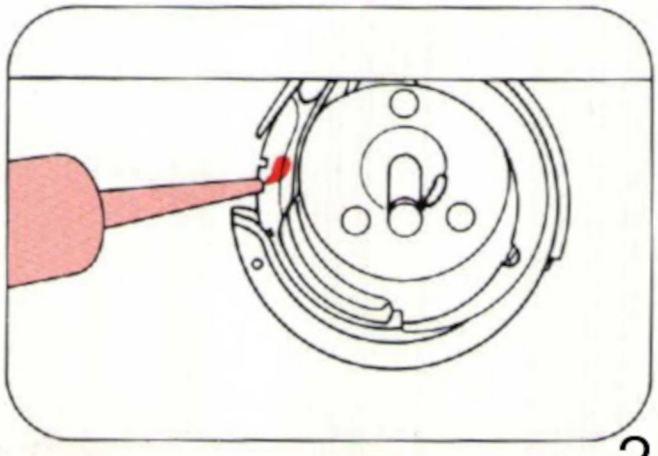

Changing the fuse
Turn fuse holder K counter-clockwise a quarter turn with a screwdriver, release it and take it out. Pull fuse L out of holder K. Insert a new fuse in the holder and replace the holder, pushing it in with the screwdriver and turning it clockwise a quarter turn. FF2A fuses can be obtained from your local Pfaff dealer.

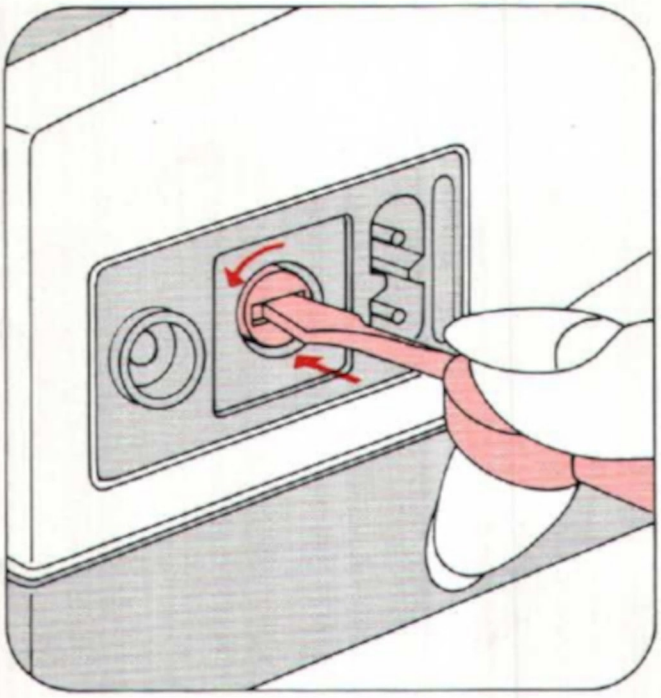

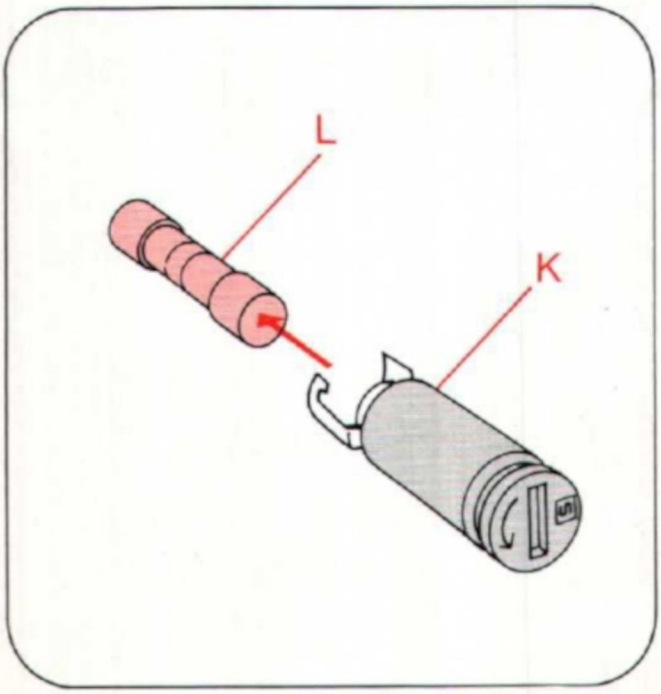

Some safety rules

1. Be careful when sewing that your fingers will not be injured by the needle.
2. Make sure you pull out the power cord plug whenever you want to change needle, sewing foot, bobbin or needle plate, when you clean and oil the machine, or when you have to interrupt sewing and leave the machine for a while.
3. Be sure to use only a 15-watt light bulb in the sewing lamp.

Trouble shooting

Cause:	Remedy:
1. Machine skips stitches	
Needle not inserted correctly.	Push needle up as far as it will go, its flat shank side facing toward the back.
Wrong needle used.	Insert system 130/705 H needle.
Needle bent or blunt.	Insert new needle.
Machine threaded improperly.	Check threading.
Needle too thin for thread used.	Select needle according to Needle and Thread Chart.
2. Needle thread breaks	
For any of the above reasons.	See par. 1 above.
Thread tension too strong.	Regulate thread tensions.
Poor-quality or knotty thread used, or thread that has become too dry by excessive storage.	Use only good-quality thread.
3. Needle breaks	
Needle not pushed up as far as it will go.	Insert new needle and push it up as far as it will go.
Needle bent.	Insert new needle.
Needle too thin or too thick.	See Needle and Thread Chart.
Needle bent and strikes needle plate because work is pushed or pulled.	Let machine feed the work alone. Only guide the material lightly.
Bobbin case improperly inserted.	When inserting the bobbin case, press against it until it snaps into place.
4. Seam is not uniform	
Tension out of adjustment.	Check upper and lower tensions.
Thread too thick, knotty or hard.	Use first-class thread only.
Bobbin thread wound unevenly.	During bobbin winding, do not hold thread in hand, but pass it through the bobbin tension stud.
Kinks appear on top and bottom of material.	Thread machine properly and check both tensions.

Cause:	Remedy:
5. Machine feeds irregularly or not at all	
Lint has accumulated between tooth rows of feed dog.	Remove needle plate and clean out lint.
Feed dog dropped. (Lever 17 is at left.)	Flick lever 17 to the right.
6. Machine runs with difficulty	
Thread ends in hook raceway.	Remove thread ends and put a drop of oil into hook raceway.
7. Electronic bobbin thread monitor does not work properly	
Thread ends and lint have accumulated on the photo-electronic eye in the free arm cover, in the bobbin case and in and around the sewing hook.	Remove thread ends and dirt.
8. Sewing lamp lights up, but machine is not running	
Fuse is faulty.	Replace fuse.
9. Safety and electronic system	
Machine does not start running.	Switch master switch off and on again.
Yellow indicator remains on even during sewing.	Switch master switch off and on again.
Red indicator light remains on, but does not flash.	Switch master switch off and on again.
When winding through needle eye the needle makes a stitch first.	Do not start winding until yellow indicator light lights up after presser bar lifter has been raised.

10. Fundamental rules

During sewing never operate the Stopmatic control.
Never run a threaded machine unless there is a piece of fabric under the sewing foot.
If you have to leave the machine, even for a short while, be sure to switch off the master switch. This is particularly important when children are around.

11. Machine skips stitches in overlock seam	
Overlock-stitch attachment fitted loosely.	Secure attachment in position by tightening screw L securely (page 20).
Seam does not look neat.	Check thread tensions.

Special accessories

The special accessories listed below are intended for special sewing jobs. They can be obtained from your Pfaff dealer. Not all the sewing feet listed below are at present available as snap-on feet. To attach a conventional sewing foot, remove the sewing foot holder.

Accessory	Ordering No.	Sewing Operation
Cording set	93-107 560-91	For cording work (needle size 80, for fine cording needle size 70)
Cording foot, 3 grooves (twin needle with 2.5 or 3.0 mm needle gauge)	93-040 948-31	
Cording foot, 5 grooves (twin needle with 1.8-, 2.0- or 2.5-mm needle gauge)	93-040 950-31	
Cording foot, 7 grooves (twin needle with 1.4-, 1.6 or 1.8-mm needle gauge)	93-040 952-31	
Fringe sewing foot	93-040 943-31	For sewing fringes and for basting
Straight-stitch foot	98-074 005-00	For topstitching and sewing very delicate and soft fabrics (silk jersey, etc.)
Needle plate with round needle hole for free-arm models	93-040 940-35	
Edge guide with screw	93-053 077-25	For edge stitching
Zipper foot	98-501 000-27	For inserting zippers
Felling foot	93-040 938-31	For felled seams
Cording foot	93-040 915-35	For cording and appliqué work
Zigzag shirring foot	93-847 520-06	For shirring valances
Eyeletting plate	93-040 946-45	For eyeletting
Hemmer foot	93-040 934-31	For hemming edges with zigzag stitches
Hemmer foot (shell-edge) 2.0 mm	93-847 546-00	
Hemmer foot (rolled edge) 1.0 mm	93-847 547-00	
Bias binder	98-055 622-00	For binding edges with bias tape
Darning foot	93-040 960-91	Darning and embroidering
Zigzag Teflon foot (coated sole)	93-040 955-91	For sewing plastic materials
Roller foot	93-100 912-21	For sewing coated synthetic materials
Edge guide		For edge stitching

PFAFF-HANDELSGESELLSCHAFT
für Haushaltnähmaschinen m.b.H.
7500 Karlsruhe 41 · West Germany

Subject to alterations
in design.
No. 22 403 R 0481